efrcom Lütfi Çağıl
CONFIDENTIAL

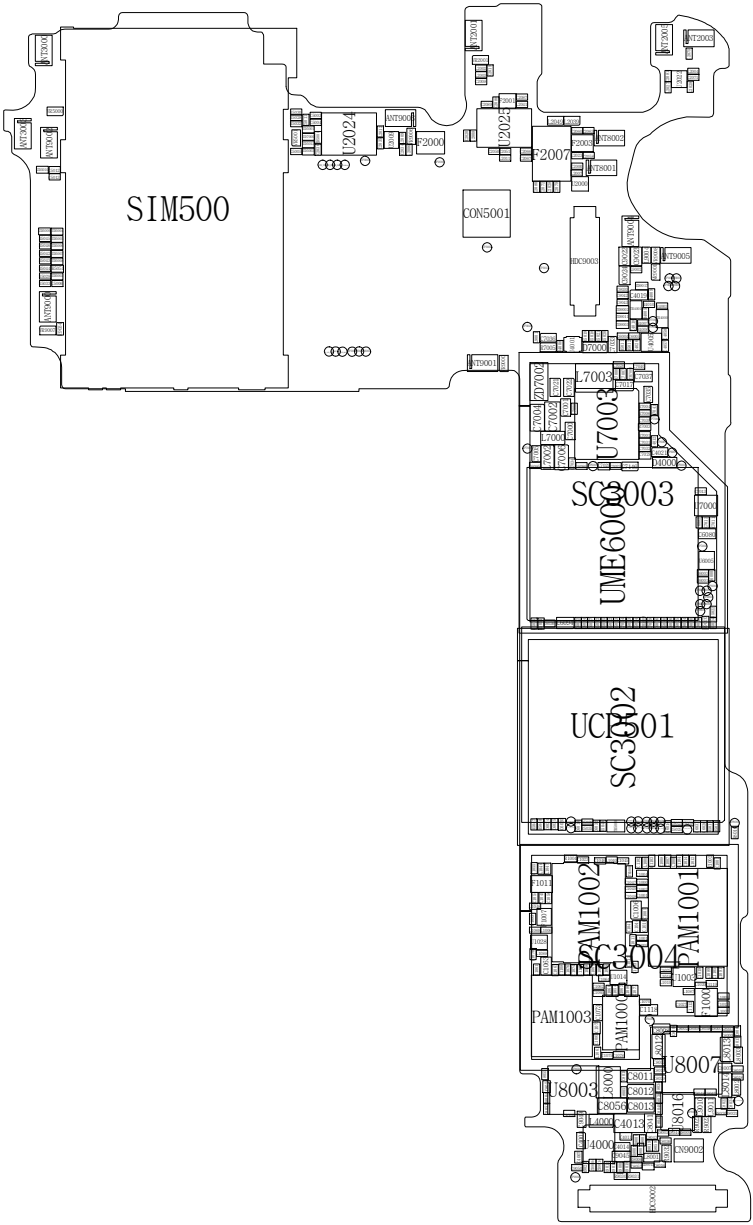

JTAG6000

JTAG6001

JTAG6002

JTAG6003

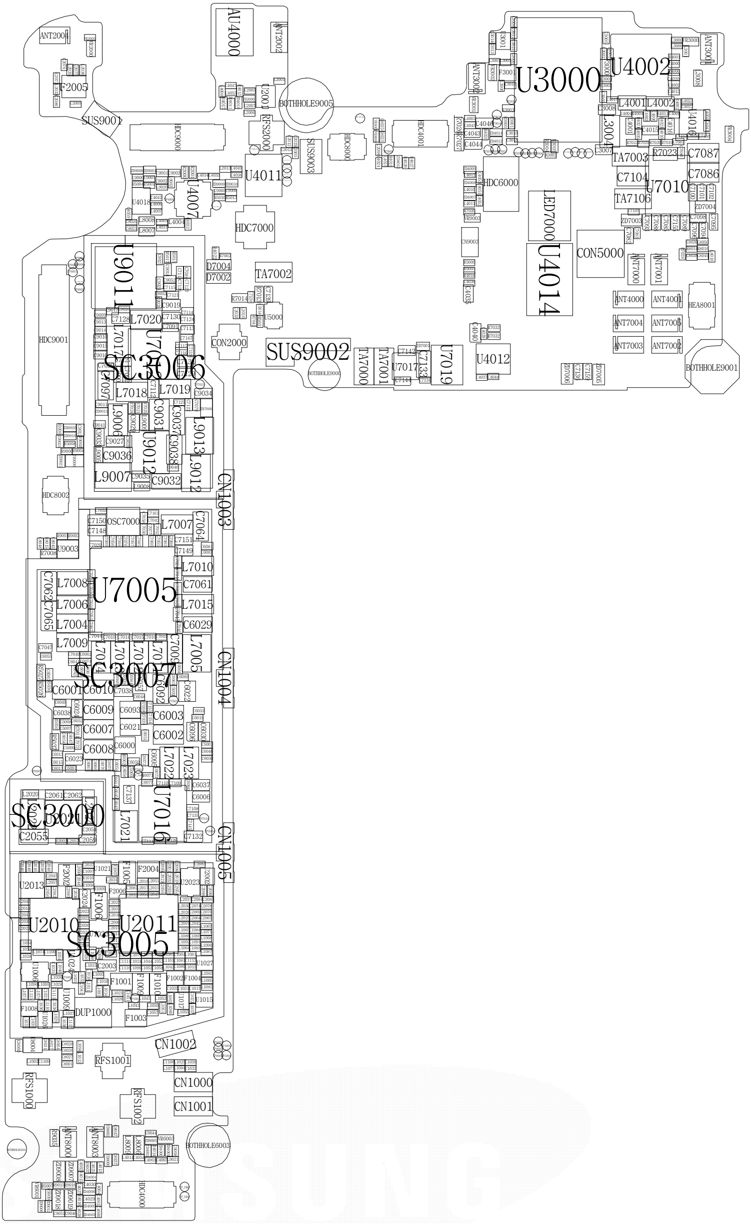

ANT2004
F2005
SUS9001
AU4000
ANT2002
U2001
BOTHHOLE9005
RFS2000
HDC9000
SUS9003
HDC8000
HDC4001
U4011
U4007
U4018
HDC7000
U3000
U4002
ANT3001
ANT3002
F3001
L4001
L4002
L3004
C3008
C3007
U4016
TA7003
R7023
C7087
C7086
C7104
U7010
TA7106
HDC6000
LED7000
U4014
CON5000
ANT7000
ANT7001
ANT4000
ANT4001
HEA8001
ANT7004
ANT7005
ANT7003
ANT7002
BOTHHOLE9001
D7004
D7002
TA7002
U5000
CON2000
SUS9002
BOTHHOLE9000
TA7000
TA7001
U7017
C7133
U7019
U4012
HDC9001
U9011
L7020
SC3006
L7018
L7019
C9031
C9037
L9006
U9012
L9013
L9012
C9036
L9007
C9032
HDC8002
CN1003
OSC7000
L7007
C7064
U9003
U7005
L7008
L7006
L7004
L7009
C7062
C7065
L7010
C7061
L7015
C6029
L7005
CN1004
SC3007
C6001
C6010
C6009
C6007
C6008
C6003
C6002
C6093
C6021
C6000
L7022
L7023
C6037
C6006
U7016
L7021
C7132
SC3000
C2055
CN1005
U2013
F2002
U1021
F1005
F2004
U2023
F2006
F1006
U2010
U2011
SC3005
C2003
F1001
F1009
F1010
F1002
F1004
U1027
U1015
U1017
DUP1000
F1003
F1008
U1009
U1026
CN1002
RFS1001
RFS1000
CN1000
CN1001
RFS1002
BOTHHOLE6003
ANT8000
ANT8003
HDC4000

SAMSUNG CONFIDENTIAL
THIS DOCUMENT CONTAINS CONFIDENTIAL
AND PROPRIETARY INFORMATION OF
SAMSUNG ELECTRONICS CO'S PROPERTY.
DO NOT DISCLOSE TO OR DUPLICATE FOR OTHERS
EXCEPT AS AUTHORIZED BY SAMSUNG.

SM-G930V_REV08

2016.01.11

sheet01 : GSM / WCDMA / LTE RF
sheet02 : DIVERSITY
sheet03 : TRANSCEIVER, QFE3100, GPS
sheet04 : SENSORS, HUB, BT/WIFI, NFC, FM
sheet05 : MSM8996
sheet06 : MSM8996, MEMORY
sheet07 : POWER (PMIC), IF PMIC
sheet08 : AUDIO Codec, 2-MIC
sheet09 : DISPLAY, CAM, SUB PCB CON

Samsung Confidential
efrcom Lütfi Çağıl CONFIDENTIAL

Engineer: SAMSUNG ELECTRONICS KOREA	SAMSUNG ELECTRONICS
Drawn by: R&D TEAM - KOREA	
R&D Chk:	TITLE: SM-N910S
DOC CTRL Chk:	
SPG ENGR Chk:	
QA Chk:	REV: Drawing Number: Page:

Checked by: jaeeth | Date Changed: Friday, April 29, 2016 | Time Changed: 11:31:32 am

SAMSUNG CONFIDENTIAL
THIS DOCUMENT CONTAINS CONFIDENTIAL AND PROPRIETARY INFORMATION OF SAMSUNG ELECTRONICS CO'S PROPERTY. DO NOT DISCLOSE TO OR DUPLICATE FOR OTHERS EXCEPT AS AUTHORIZED BY SAMSUNG.

Ant

LB/MB Band T/Rx

High Band T/Rx

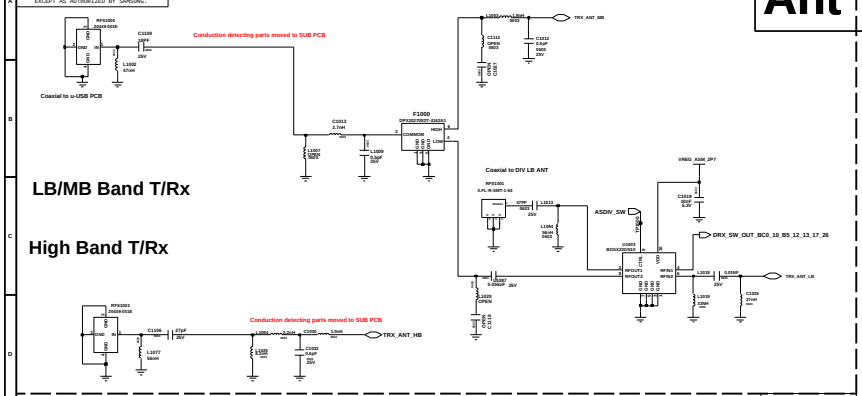

Tx

LOW Band PAMID
(LOW : B5/12/13/17/26/29, G850/900, BC0/10)

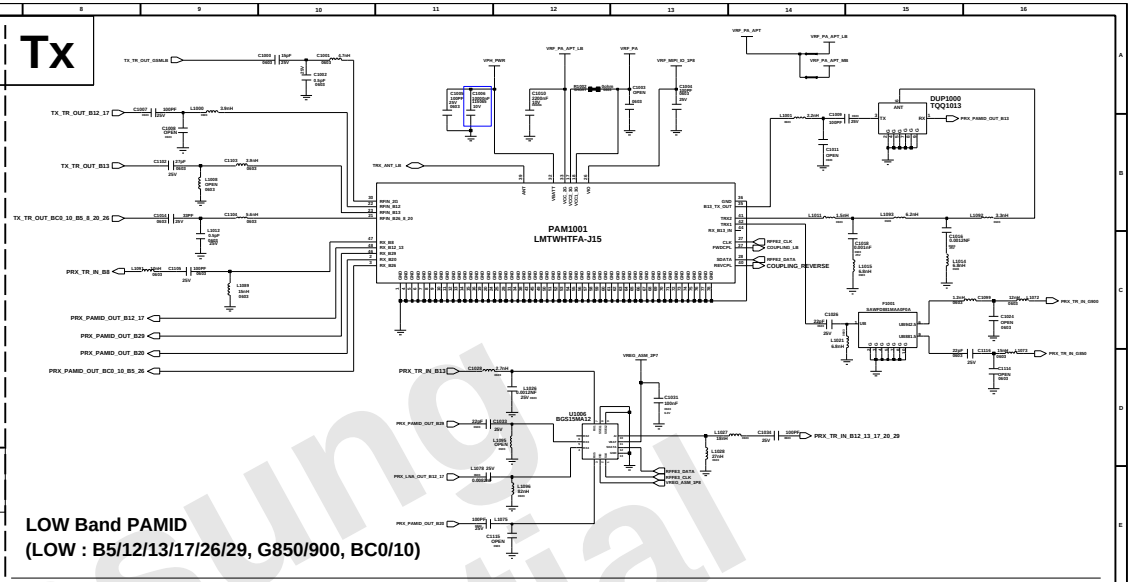

MID Band PAMID
(MID : B1/2/3/4/25, G1800/1900, BC1)

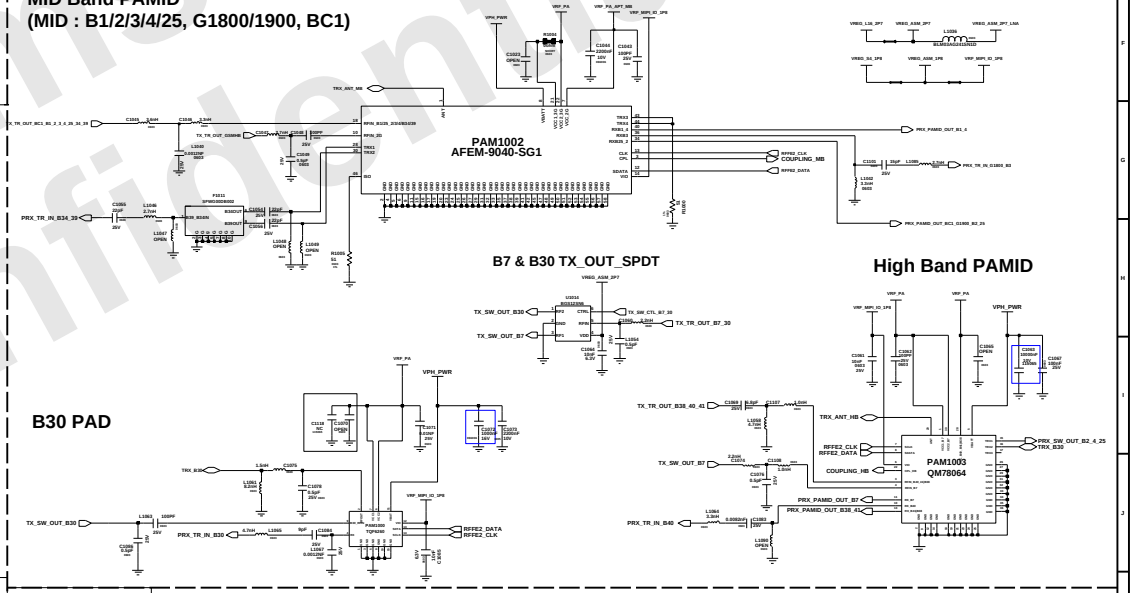

Rx

B12/17 PRX

B5/26 PRX

B13 PRx

Low Band eLNA

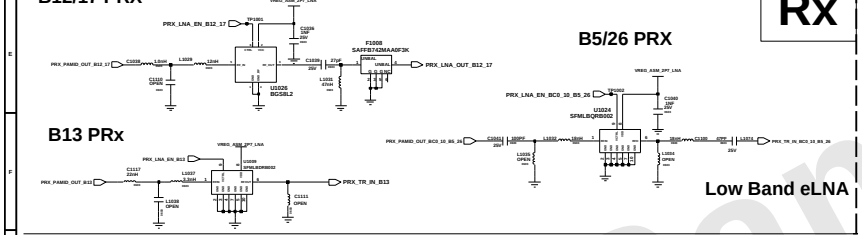

B2/25 & B4 from HB ANT

B2/25 & B4 from MB PAMid

Mid Band eLNA & HO

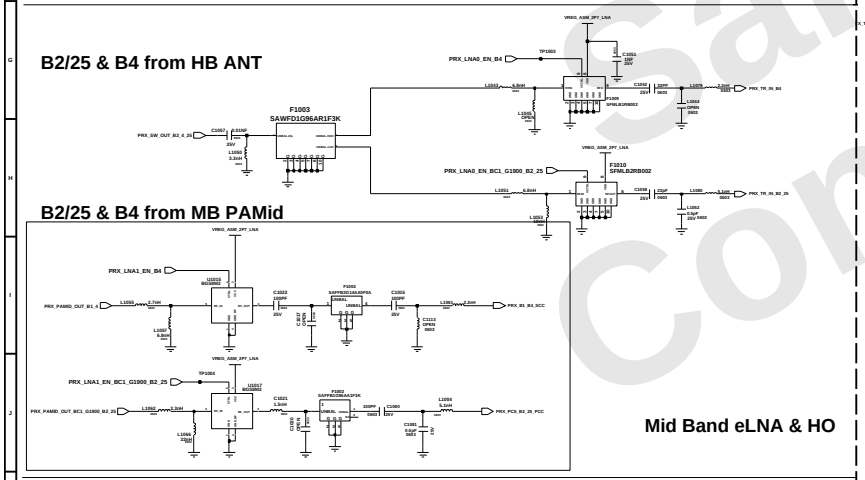

B7 PRx

B41 PRx

High Band eLNA

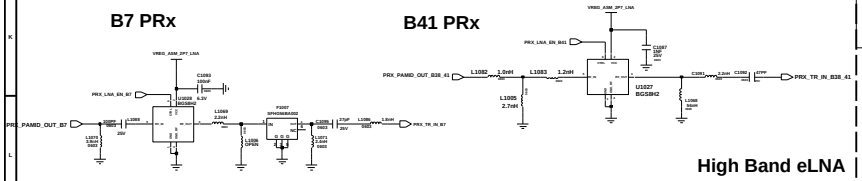

RxFB

RxFB(Tx Feedback)

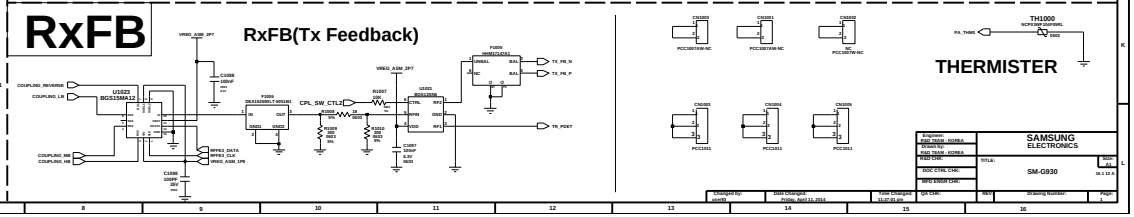

THERMISTER

Engineer: SAMSUNG ELECTRONICS KOREA	SAMSUNG ELECTRONICS		
Design By: SAMSUNG ELECTRONICS KOREA			
R&D TEAM : KOREA R&D CHK:	TITLE: SM-G930		
DOC CTRL CHK:			
INFO ENGR CHK:			
QA CHK:	REV:	Drawing Number:	Page: 1
Designed by: jsun89	Date Designed: Friday, April 11, 2014	Time Designed: 11:27:22 am	

Samsung Confidential

SAMSUNG CONFIDENTIAL
THIS DOCUMENT CONTAINS CONFIDENTIAL AND PROPRIETARY INFORMATION OF SAMSUNG ELECTRONICS CO'S PROPERTY. DO NOT DISCLOSE TO OR DUPLICATE FOR OTHERS EXCEPT AS AUTHORIZED BY SAMSUNG.

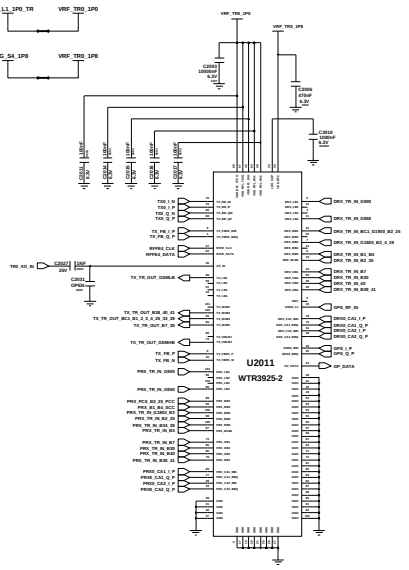

WTR3925-2

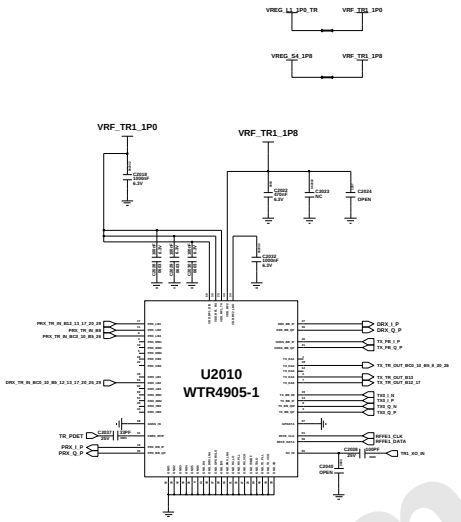

WTR4905-1

ET PMIC

QFE3100

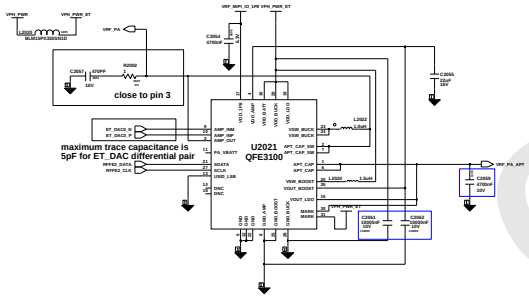

GPS

GPS_ANT_PATTERN

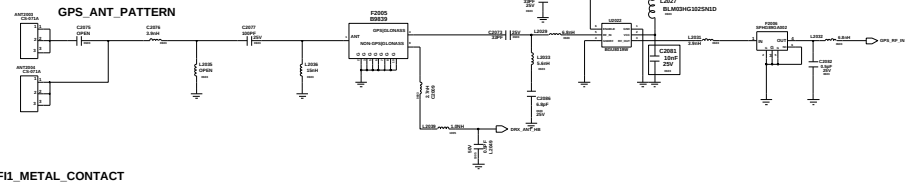

WIFI1_METAL_CONTACT

SUB ANT LB/HB

SUB ANT LB S/W

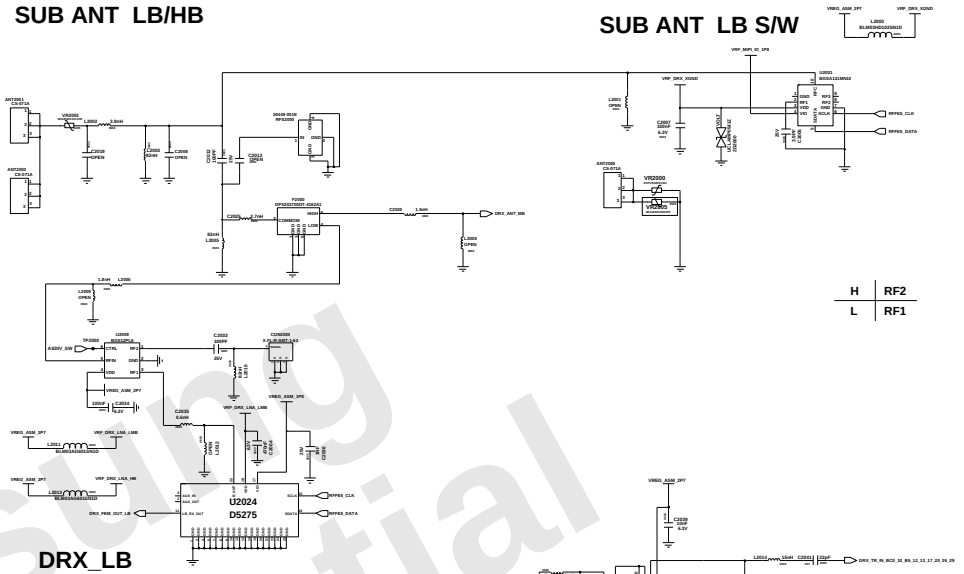

H	RF2
L	RF1

DRX_LB

(BAND 5/8/12/13/17/20/26/BC0/10)

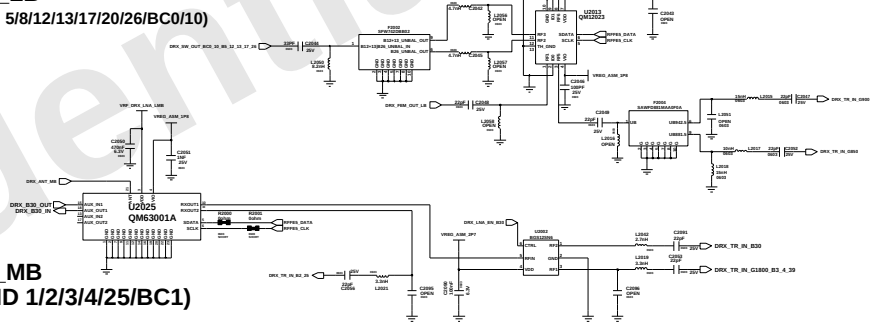

DRX_MB

(BAND 1/2/3/4/25/BC1)

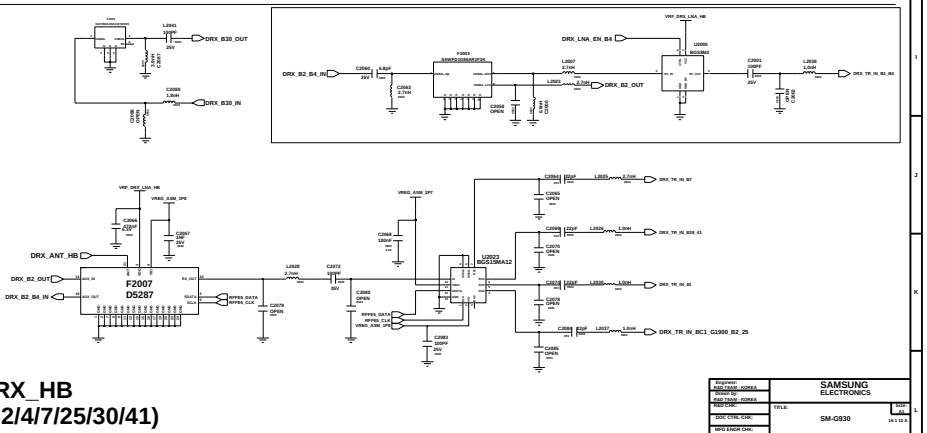

DRX_HB

(B2/4/7/25/30/41)

Samsung Confidential

Engineer: SAMSUNG ELECTRONICS KOREA	SAMSUNG ELECTRONICS
Design No: RND CHK:	TITLE: SM-G930
DOC CTRL CHK:	
MFG ENGR CHK:	
QA CHK:	REV: Drawing Number: Page: 1

Changed By: jaeo89 | Date Changed: Friday, April 11, 2014 | Time Changed: 11:27:32 am

SAMSUNG CONFIDENTIAL
THIS DOCUMENT CONTAINS CONFIDENTIAL
AND PROPRIETARY INFORMATION OF
SAMSUNG ELECTRONICS CO'S PROPERTY.
DO NOT DISCLOSE TO OR DUPLICATE FOR OTHERS
EXCEPT AS AUTHORIZED BY SAMSUNG.

BT/WIFI

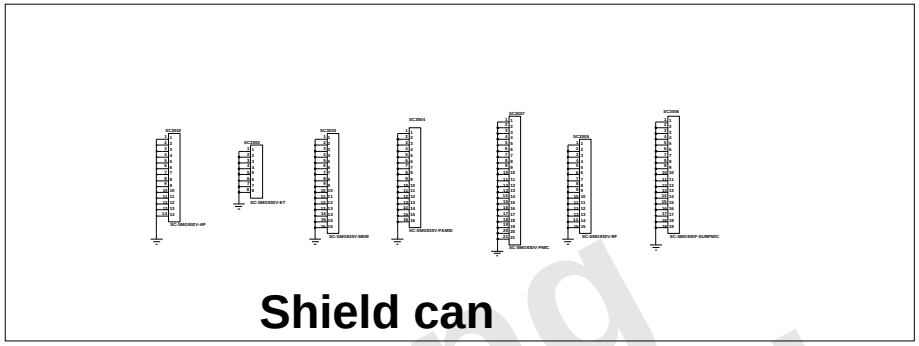

Shield can

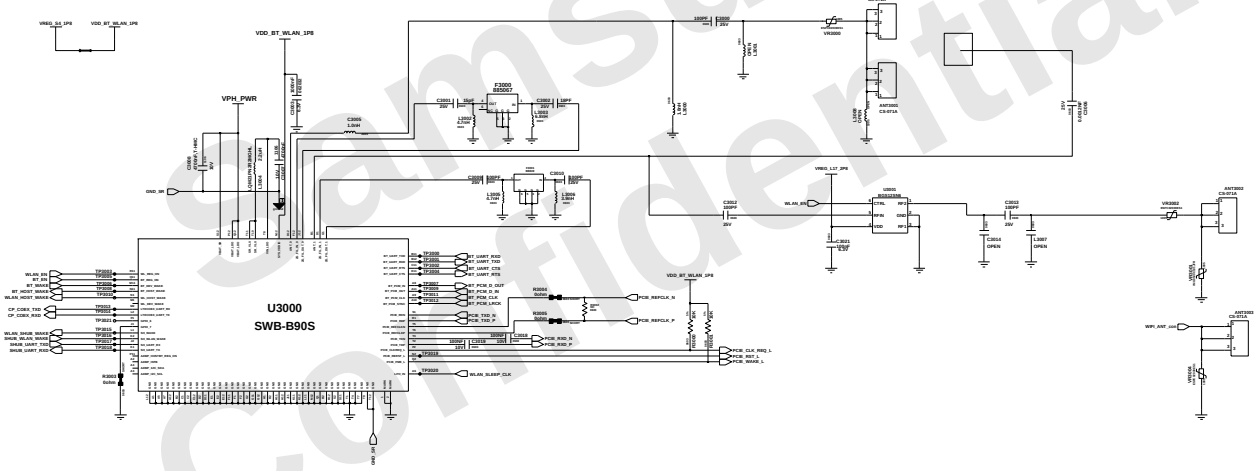

BCM4359 Module

Samsung Confidential

Engineer: SAMSUNG ELECTRONICS KOREA	SAMSUNG ELECTRONICS		
Drawn by:			
R&D TEAM - KOREA			
R&D CHK:	TITLE: SM-G930	SIZE: A4	14.1.22 A
DOC CTRL CHK:			
MFG ENGR CHK:			
QA CHK:	REV:	Drawing Number:	Page: 4

Changed by: jaeo99	Date Changed: Friday, April 11, 2014	Time Changed: 11:37:32 am

SAMSUNG CONFIDENTIAL
THIS DOCUMENT CONTAINS CONFIDENTIAL
AND PROPRIETARY INFORMATION THAT IS
SAMSUNG ELECTRONICS CO'S PROPERTY.
DO NOT DISCLOSE TO OR DUPLICATE FOR OTHERS
EXCEPT AS AUTHORIZED BY SAMSUNG.

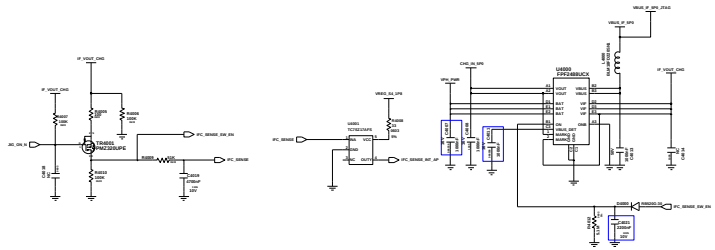

NFC

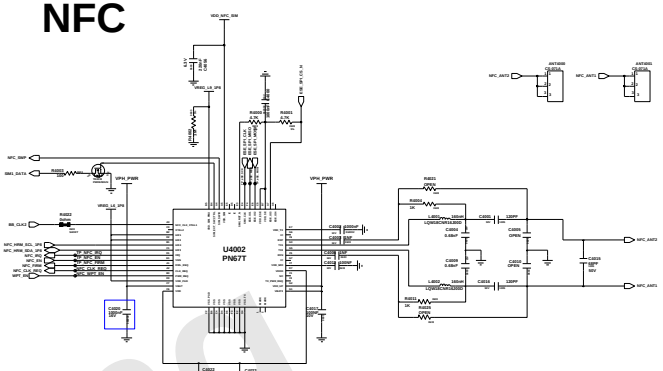

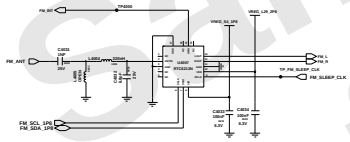

FM RADIO

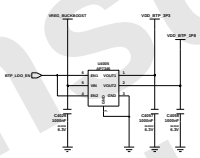

BTP OCP and PWR

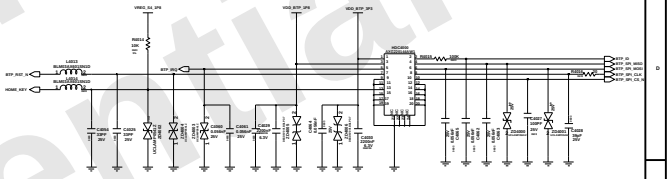

HOME_BTP_TOUCH

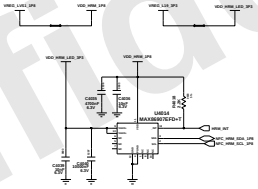

HRM SENSOR

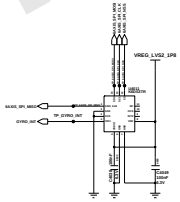

6 Axis Sensor (GYRO,ACCEL)

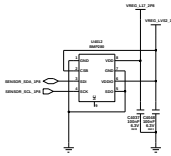

Barometer Sensor

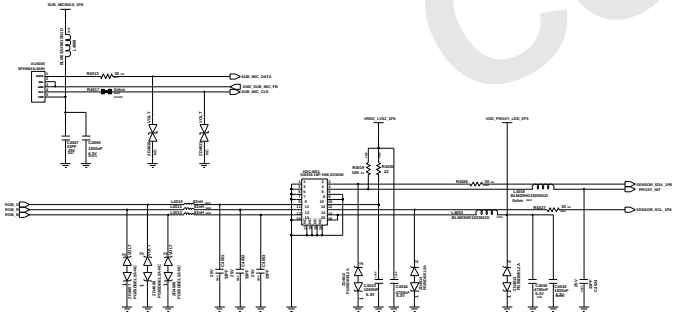

Prox & MIC & LED CON.

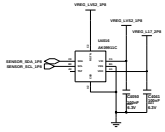

Magnetic Sensor

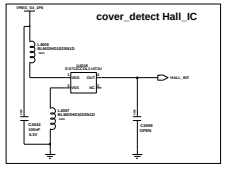

Hall Sensor

Engineer:	BT/WIFI, NFC, SENSOR				
Drawn by:					
R&D CHK:	TITLE:			Size:	
DOC CTRL CHK:	SM-G930				
MFG ENGR CHK:					
Changed by:	Date Changed:	Time Changed:	QA CHK:	REV:	Drawing Number:	Page:

Samsung Confidential

SAMSUNG CONFIDENTIAL
THIS DOCUMENT CONTAINS CONFIDENTIAL
AND PROPRIETARY INFORMATION OF
SAMSUNG ELECTRONICS CO'S PROPERTY.
DO NOT DISCLOSE TO OR DUPLICATE FOR OTHERS
EXCEPT AS AUTHORIZED BY SAMSUNG.

MSM8996 1/2

** V1.1 : No Shunt Cap
SPM Design Guide (MSM8974Pro V1.0)
15pF (+/-10%) Shunt cap. without Stub.
Trace Parameter : L=1.65inH, R=70m ohm
Routing Order : MSM -- Shunt -- PMIC
CLK & DATA Spacing : at least 3W
The length mismatching < 2mm (Data & CLK)
(DATA & Clock SEN, EN=0, PMIC DRV Strength=1t)

I2C PULL UP

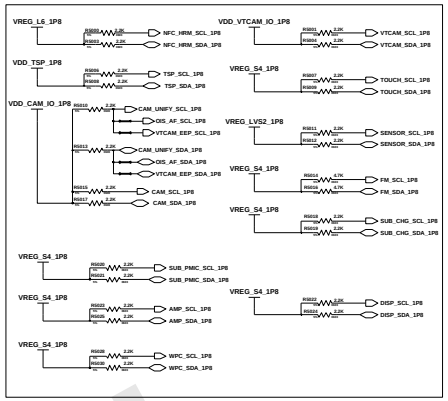

2D BARCODE

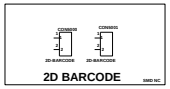

UCP501-1
MSM8996

NANOSIM CON.

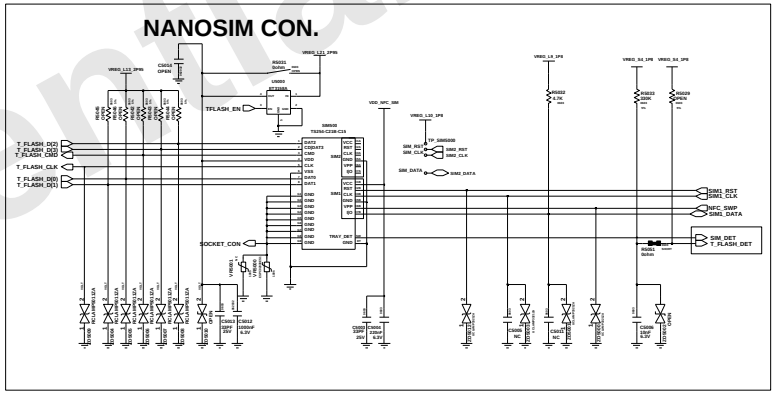

Samsung Confidential

Engineer	AP(GPIO), SIM/SD CARD
Issued by	
R&D CHK:	TITLE: SM-G930
DOC CTRL CHK:	REV: A1
MFG ENGR CHK:	
QA CHK:	Drawing Number

Changed By | Date Changed | Total Changed

SAMSUNG CONFIDENTIAL
THIS DOCUMENT CONTAINS CONFIDENTIAL
AND PROPRIETARY INFORMATION OF
SAMSUNG ELECTRONICS CO'S PROPERTY.
DO NOT DISCLOSE TO OR DUPLICATE FOR OTHERS
EXCEPT AS AUTHORIZED BY SAMSUNG.

MSM8996 BYPASS CAPACITORS

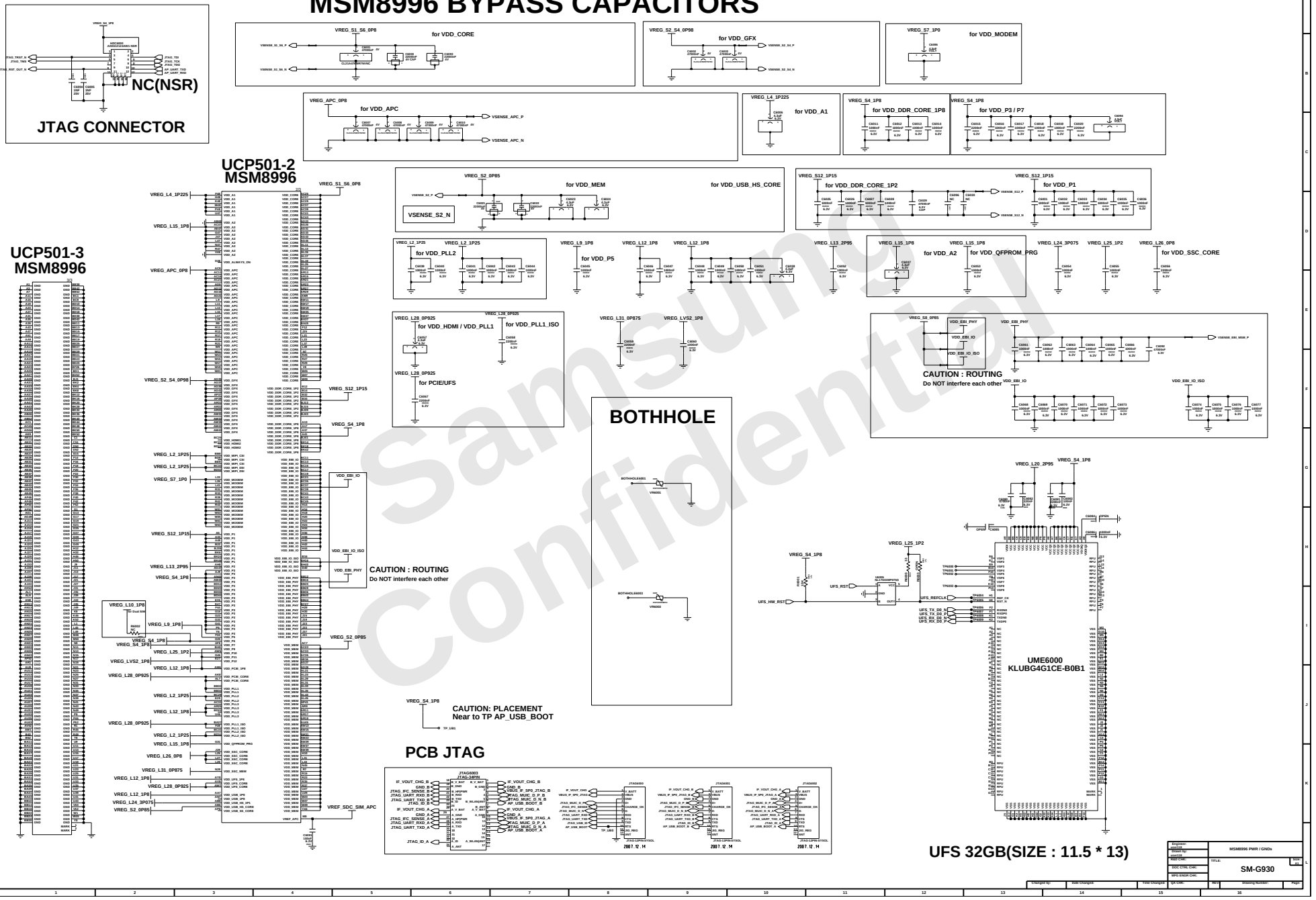

Samsung Confidential

SAMSUNG CONFIDENTIAL
THIS DOCUMENT CONTAINS SAMSUNG ELECTRONICS PROPRIETARY INFORMATION THAT IS SAMSUNG ELECTRONICS CO'S PROPERTY. DISCLOSURE TO THIRD PARTIES OR ANY USE WITHOUT SUCH SUCCIPT IS AUTHORIZED BY SAMSUNG.

POWER

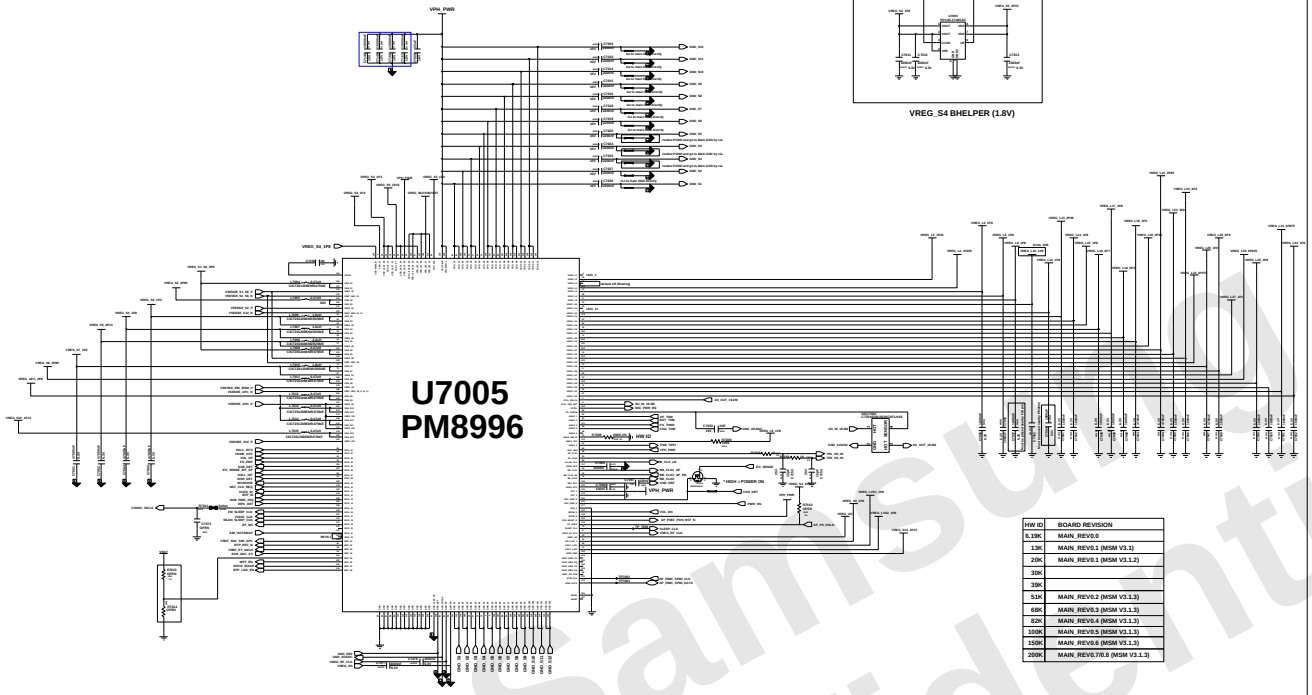

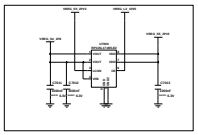

VREG_S4 BHELPER (1.8V)

HW ID	BOARD REVISION
6.19K	MAIN_REV0.0
13K	MAIN_REV0.1 (MSM V3.1)
20K	MAIN_REV0.1 (MSM V3.1.2)
30K	
39K	
51K	MAIN_REV0.2 (MSM V3.1.3)
68K	MAIN_REV0.3 (MSM V3.1.3)
82K	MAIN_REV0.4 (MSM V3.1.3)
100K	MAIN_REV0.5 (MSM V3.1.3)
150K	MAIN_REV0.6 (MSM V3.1.3)
200K	MAIN_REV0.7/0.8 (MSM V3.1.3)

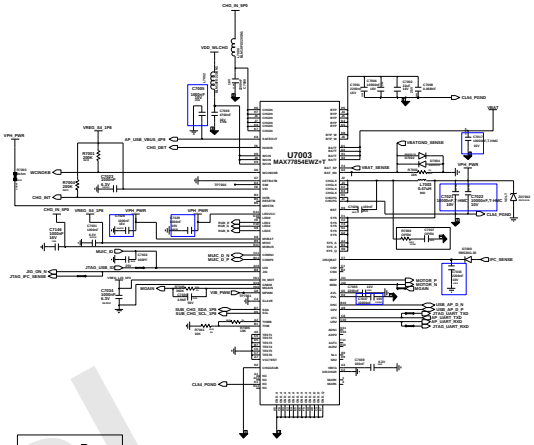

REV0.7

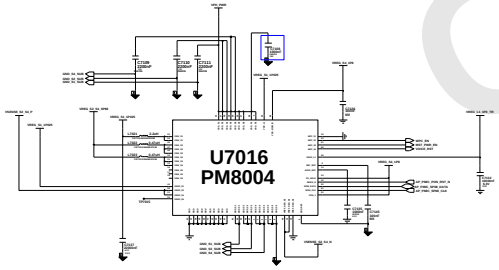

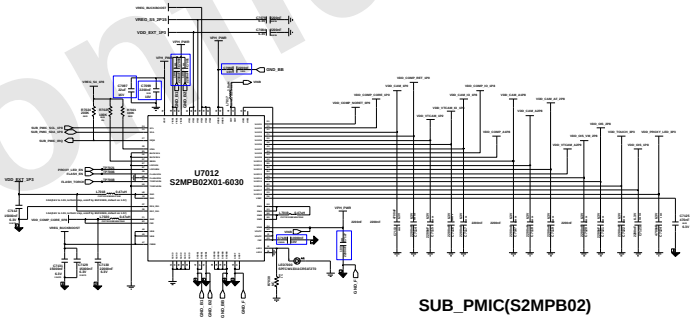

SUB_PMIC(S2MPB02)

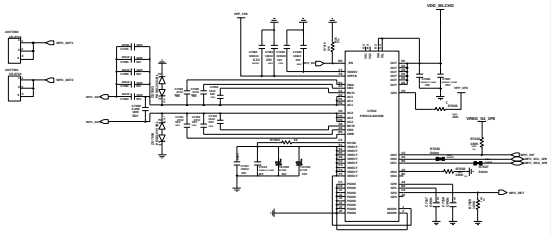

WIRELESS CHARGER IC

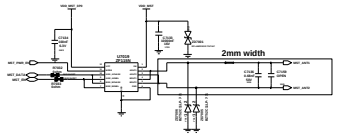

MST IC

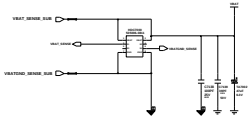

Battery Connector

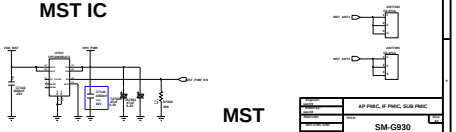

MST

Samsung Electronics	AP PMIC, IF PMIC, SUB PMIC
SM-G930	

Samsung Confidential

SAMSUNG CONFIDENTIAL
THIS DOCUMENT CONTAINS CONFIDENTIAL
AND PROPRIETARY INFORMATION OF
SAMSUNG ELECTRONICS CO'S PROPERTY.
DO NOT DISCLOSE TO OR DUPLICATE FOR OTHERS
EXCEPT AS AUTHORIZED BY SAMSUNG.

AUDIO PART

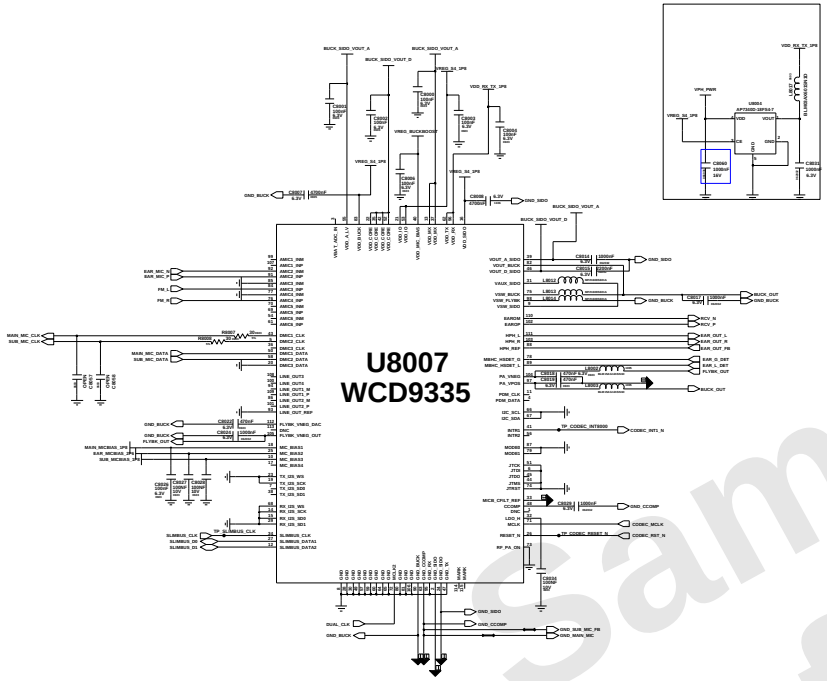

Audio Codec

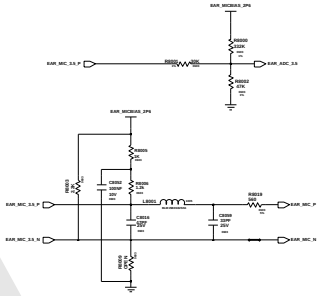

Ear MIC

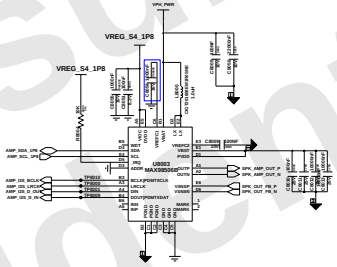

I/V SENSING BOOST AMP

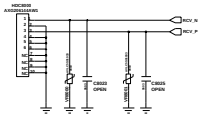

RCV CONN.

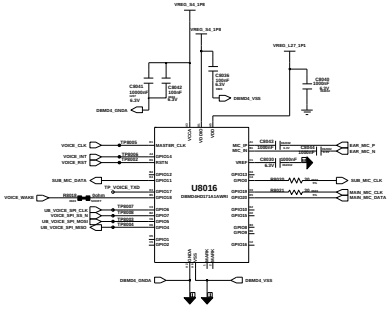

Voicewakeup IC

SPK CONTACT

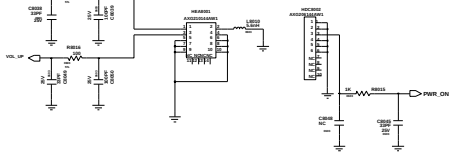

VOLKEY CONTACT

PWRKEY CONTACT

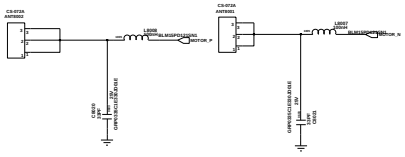

MOT CONTACT

Samsung Confidential

Engineer:	AUDIO
SOCIS Sp.	
uisr119	
PWR CHK:	TITLE: SIZE: A1
DOC CTRL CHK:	SM-G930
MFG ENGR CHK:	
QA CHK:	REV: Drawing Number: Page:

Changed By: Date Changed: Time Changed:

SAMSUNG CONFIDENTIAL
THIS DOCUMENT CONTAINS CONFIDENTIAL AND PROPRIETARY INFORMATION OF SAMSUNG ELECTRONICS CO'S PROPERTY. DO NOT DISCLOSE TO OR DUPLICATE FOR OTHERS EXCEPT AS AUTHORIZED BY SAMSUNG.

DISPLAY (For WQHD)

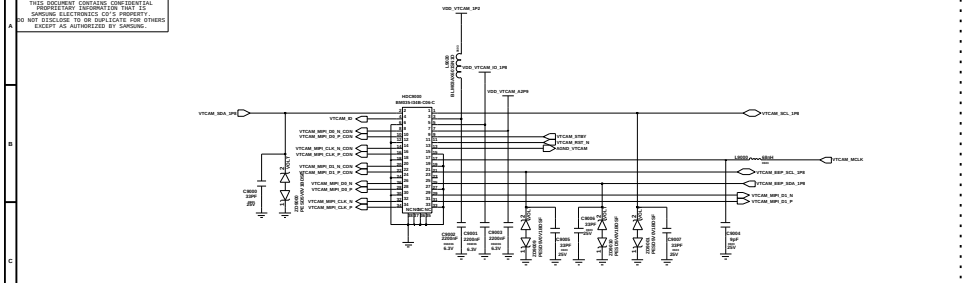

EDGE_CAM from JF

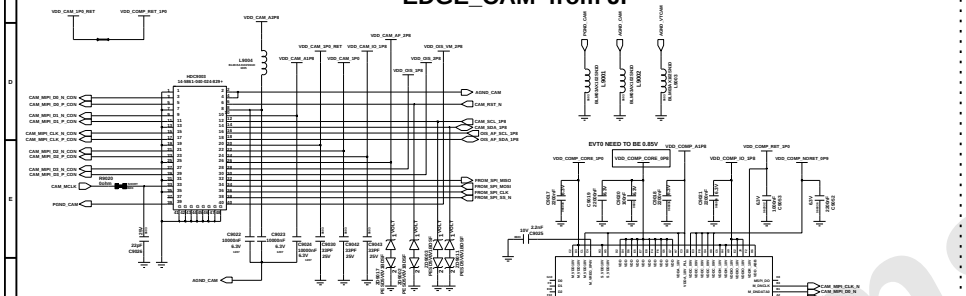

12M(2PD)_Camera Connector (MIPI)

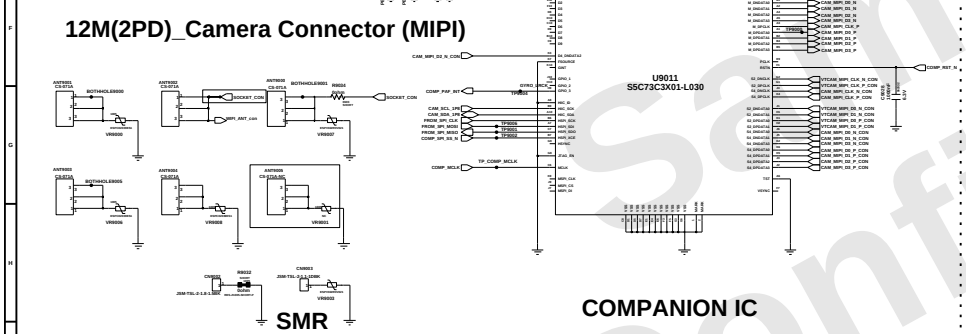

SMR

COMPANION IC

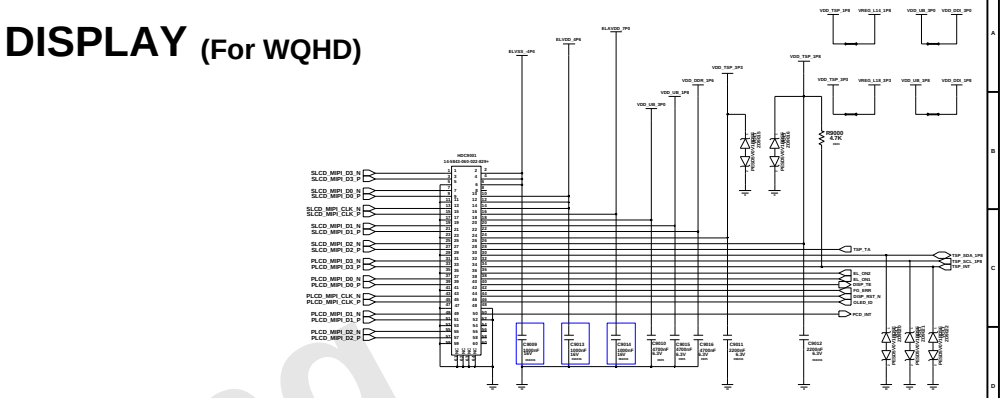

UB Connector

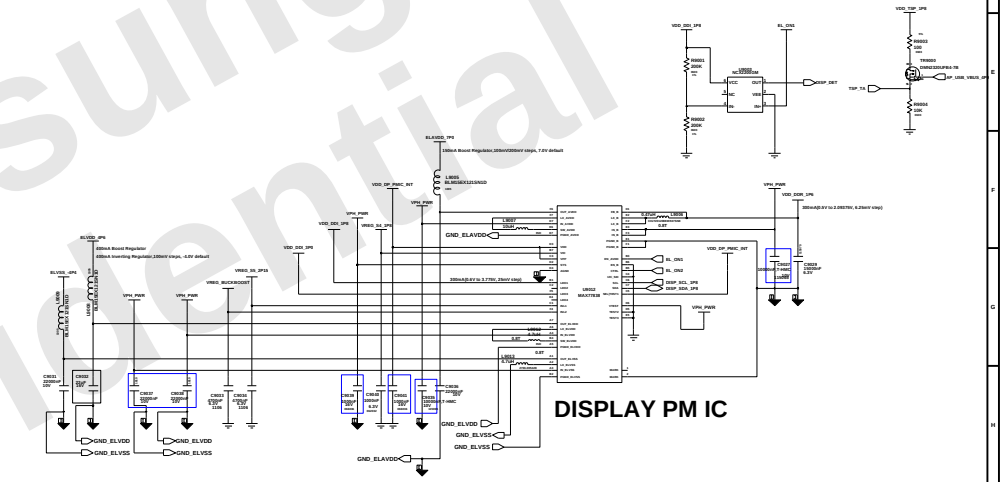

DISPLAY PM IC

SUB FPCB IF CONN.

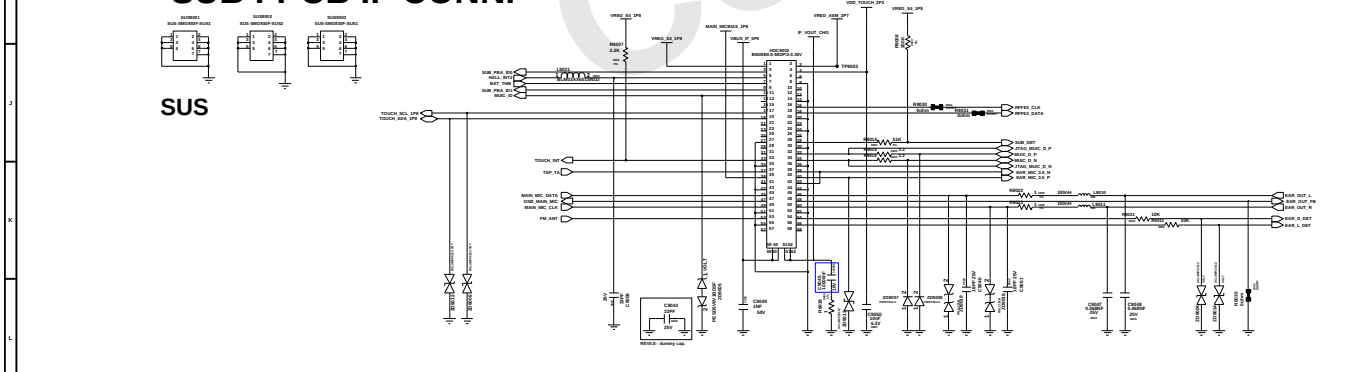

SUS

Samsung Confidential

Engineer: SAMSUNG ELECTRONICS KOREA	SAMSUNG ELECTRONICS		
Design No:			
R&D CHK:	TITLE: SM-G930	SIZE: A4	14.1 X A
DOC CTRL CHK:			
MFG ENGR CHK:			
QA CHK:	REV:	Drawing Number:	Page: 1

Changed by:	Date Changed:	Time Changed:
user79	Friday, April 25, 2014	11:30:38 am