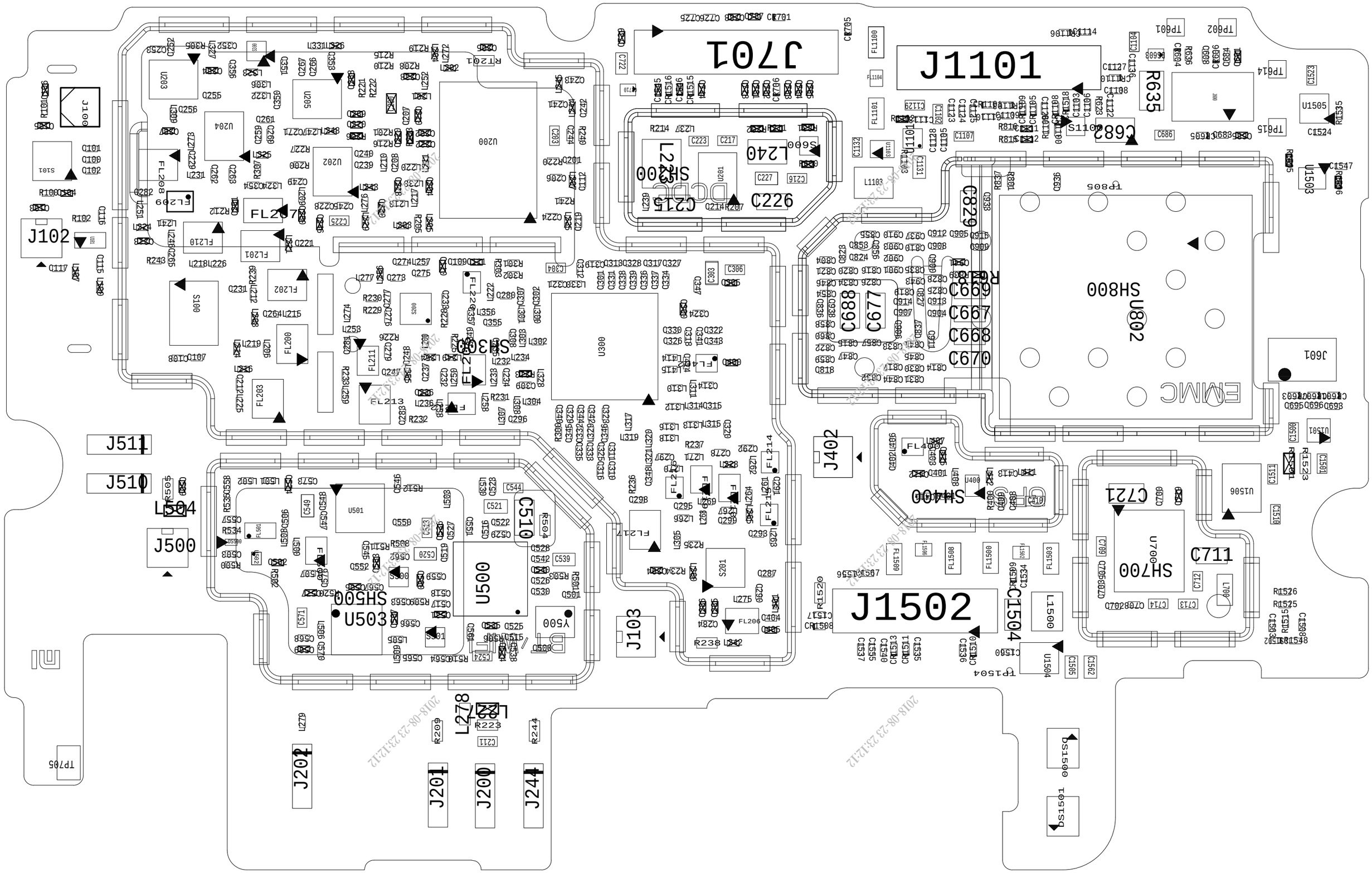
J701
J1101
R635
C682
U1505
U1503
J102
J100
U203
U205
U204
U202
U200
FL207
FL209
FL208
FL210
FL201
FL202
FL200
FL203
FL211
FL213
S100
S300
U300
S200
S201
L240
C215
C226
SH200
U802
SH800
EMMC
J601
J402
SH400
J511
J510
L504
J500
U501
U500
C510
SH500
U503
Y500
J103
J1502
C1504
SH700
U700
C721
C711
J201
J200
J244
J202
L278
L277
TP705

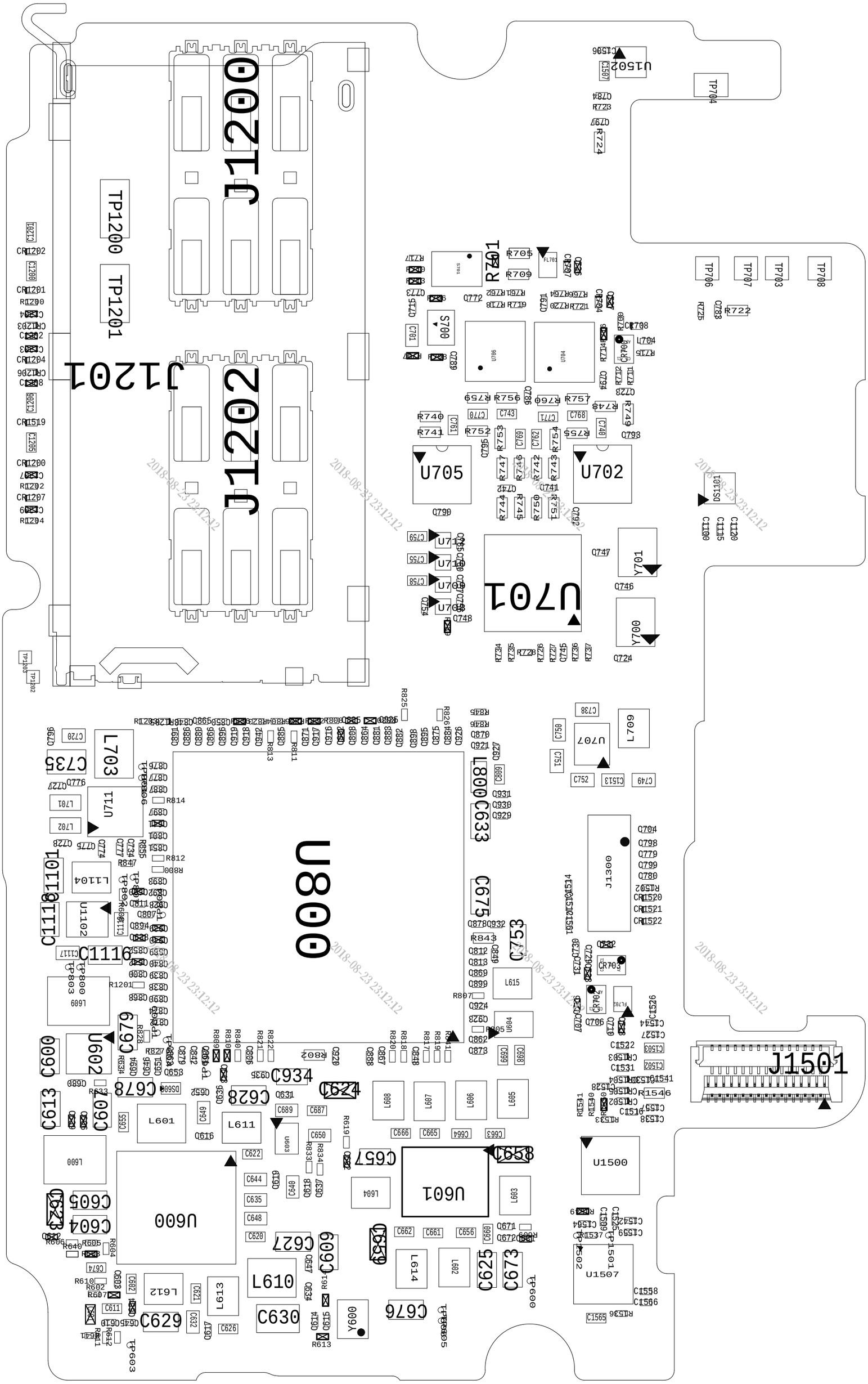
J1200
J1201
J1202
TP1200
TP1201
U705
U702
U701
Y701
Y700
U707
L709
U711
L703
C735
U800
C633
C675
C753
J1300
L615
U604
U1500
U1507
J1501
U601
U602
U600
L601
L611
L612
L613
L610
L614
L602
L604
L603
L605
L606
L607
L608
C600
C613
C607
C678
C679
C934
C624
C628
C657
C658
C605
C604
C627
C609
C619
C625
C673
C676
C629
C630
Y600
TP600
TP603
TP605
TP502
U1502
TP704
TP706
TP707
TP703
TP708
S700
R701
U786
U784
U1101
U1102
L1104
C1116
C1118
TP803
L609
L703
L701
L702
L800
C1120
C1115
C1100
2018-08-23 23:12:12

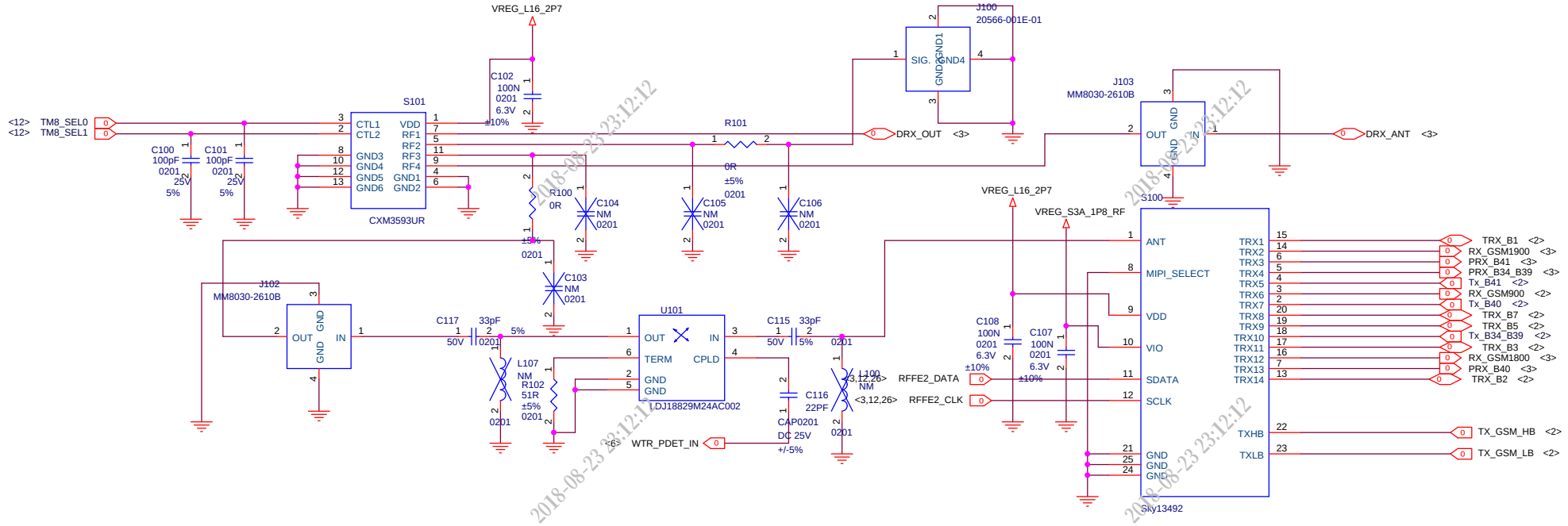

PRIMARY SWITCH(SP16T) LOGIC

Antenna Path	Bit[7]	Bit[6]	Bit[5]	Bit[4]	Bit[3]	Bit[2]	Bit[1]	Bit[0]
Sleep mode (standby)	X	0	0	0	0	0	0	0
2G transmit low band	X	0	0	0	1	0	1	0
2G transmit high band	X	0	0	0	1	0	0	0
TRX1	X	0	0	0	0	1	0	0
TRX2	X	0	0	0	0	1	0	1
TRX3	X	0	0	0	0	1	1	0
TRX4	X	0	0	0	0	1	1	1
TRX5	X	0	0	0	1	0	0	1
TRX6	X	0	0	0	1	0	1	1
TRX7	X	0	0	0	1	1	0	0
TRX8	X	0	0	0	0	0	0	1
TRX9	X	0	0	0	0	0	1	0
TRX10	X	0	0	0	0	0	1	1
TRX11	X	0	0	0	1	1	0	1
TRX12	X	0	0	0	1	1	1	0
TRX13	X	0	0	1	0	0	0	0
TRX14	X	0	0	1	0	0	0	1
Isolation mode (warm–up)	X	1	1	1	1	1	1	1

CXM3593

CTL 1	CTL 2	Active path
L	H	RF1-RF4 RF2-RF3
H	L	RF1-RF3 RF2-RF4

Primary Ant Connector, Coupler and Primary Switchplexer

Title: X5		
Size: A3	Document Number: <Doc>	Rev: P0
Date: Tuesday, October 28, 2014	Sheet 1 of 32	

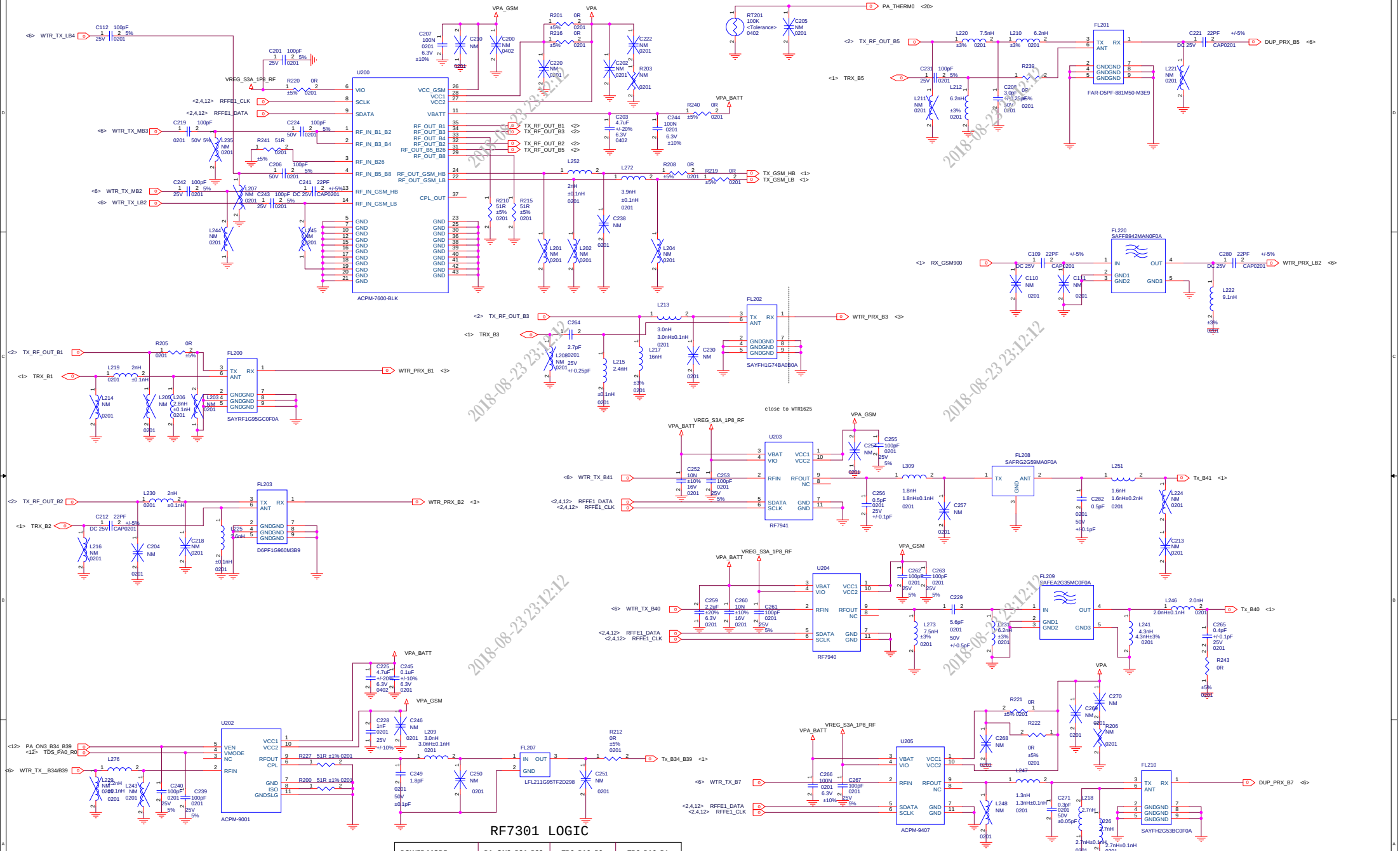

RF7301 LOGIC

POWER MODE	PA_ON3_B34_B39	TDS_PA0_R0	TDS_PA0_R1
POWER DOWN MODE	L	L	L
STANDBY MODE	L	X	X
HIGH POWER STATE	H	L	L
MEDIUM POWER STATE	H	H	L
LOW POWER STATE	H	H	H

Title	X5		
Size A2	Document Number <Doc>		Rev P0
Date: Tuesday, October 28, 2014	Sheet 2 of 32		

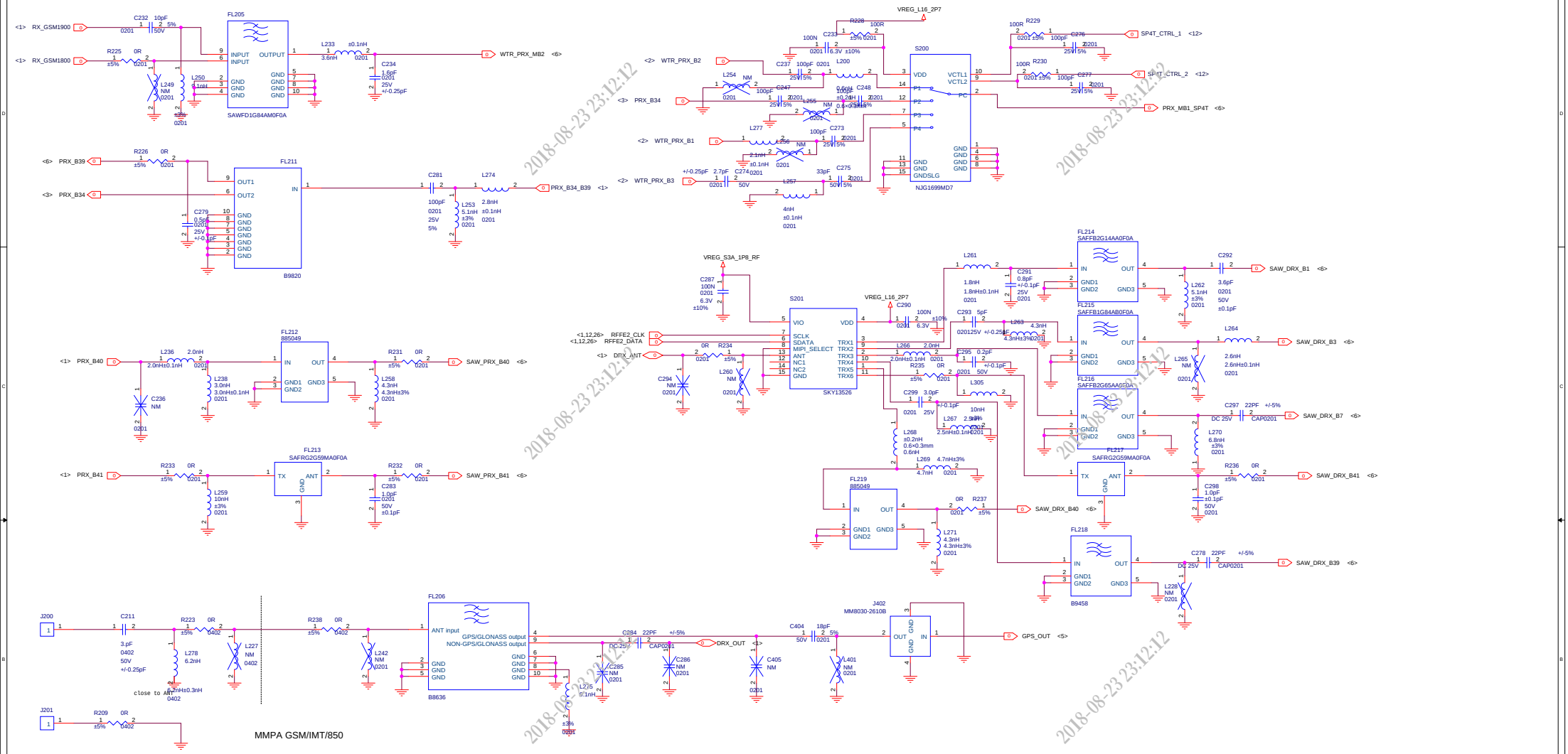

MMPA GSM/IMT/850

PRx and Drx	SP4T_CTRL_1	SP4T_CTRL_2
B2	H	L
B34	L	L
B1	L	H
B3	H	H

Title	X5		
Size A2	Document Number <Doc>		Rev P0
Date: Tuesday, October 28, 2014	Sheet 3 of 32		

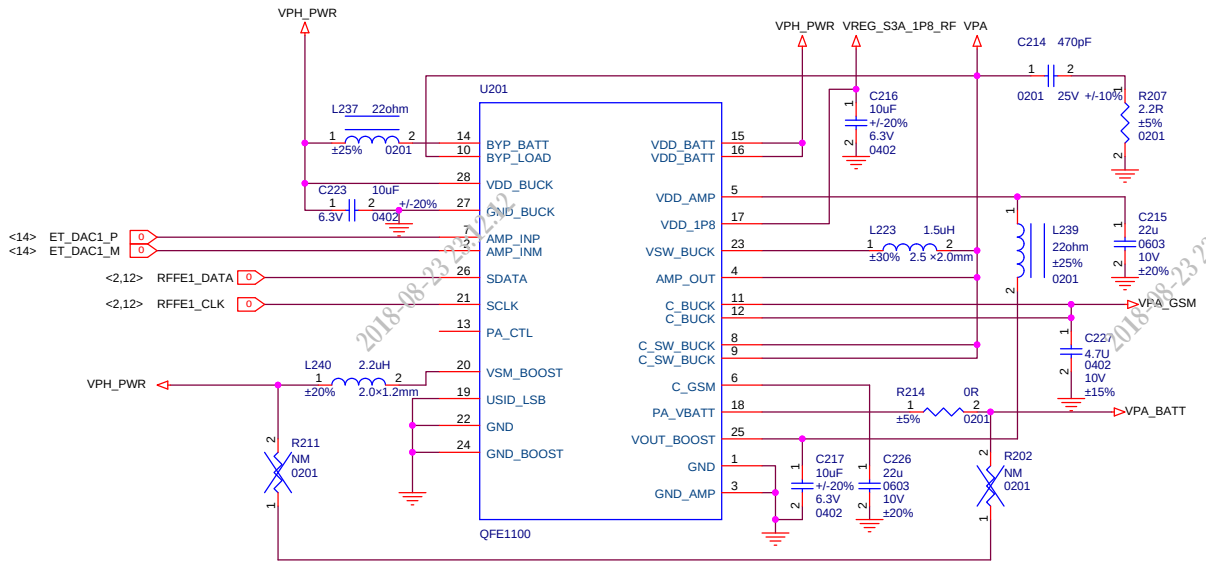

2018-08-23 23:12:12

QFE1100

Title	X5	
Size A3	Document Number <Doc>	Rev P0
Date: Tuesday, October 28, 2014	Sheet 4 of 32	

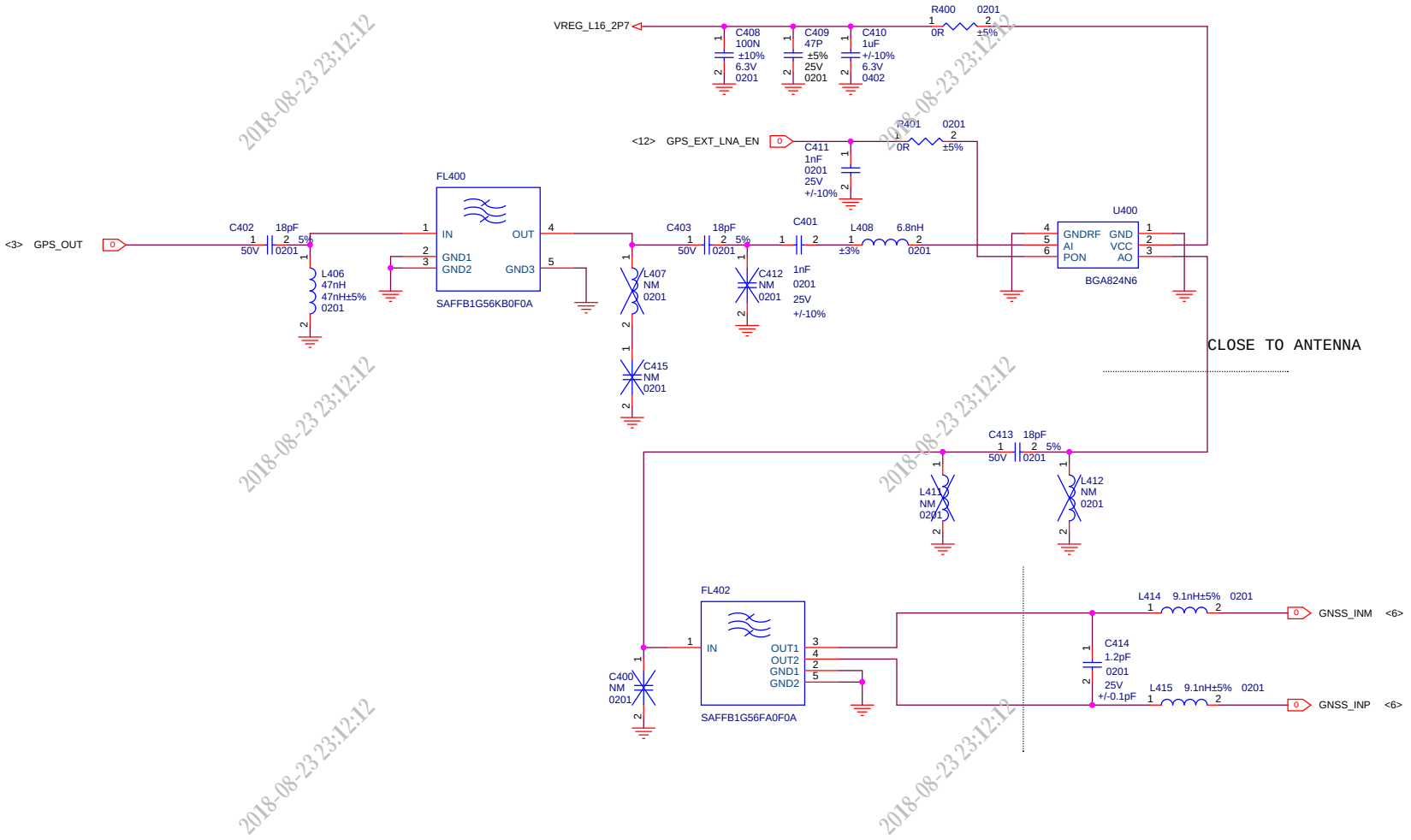

GPS

Title	X5	
Size A3	Document Number <Doc>	Rev P0
Date: Tuesday, October 28, 2014	Sheet 5 of 32	

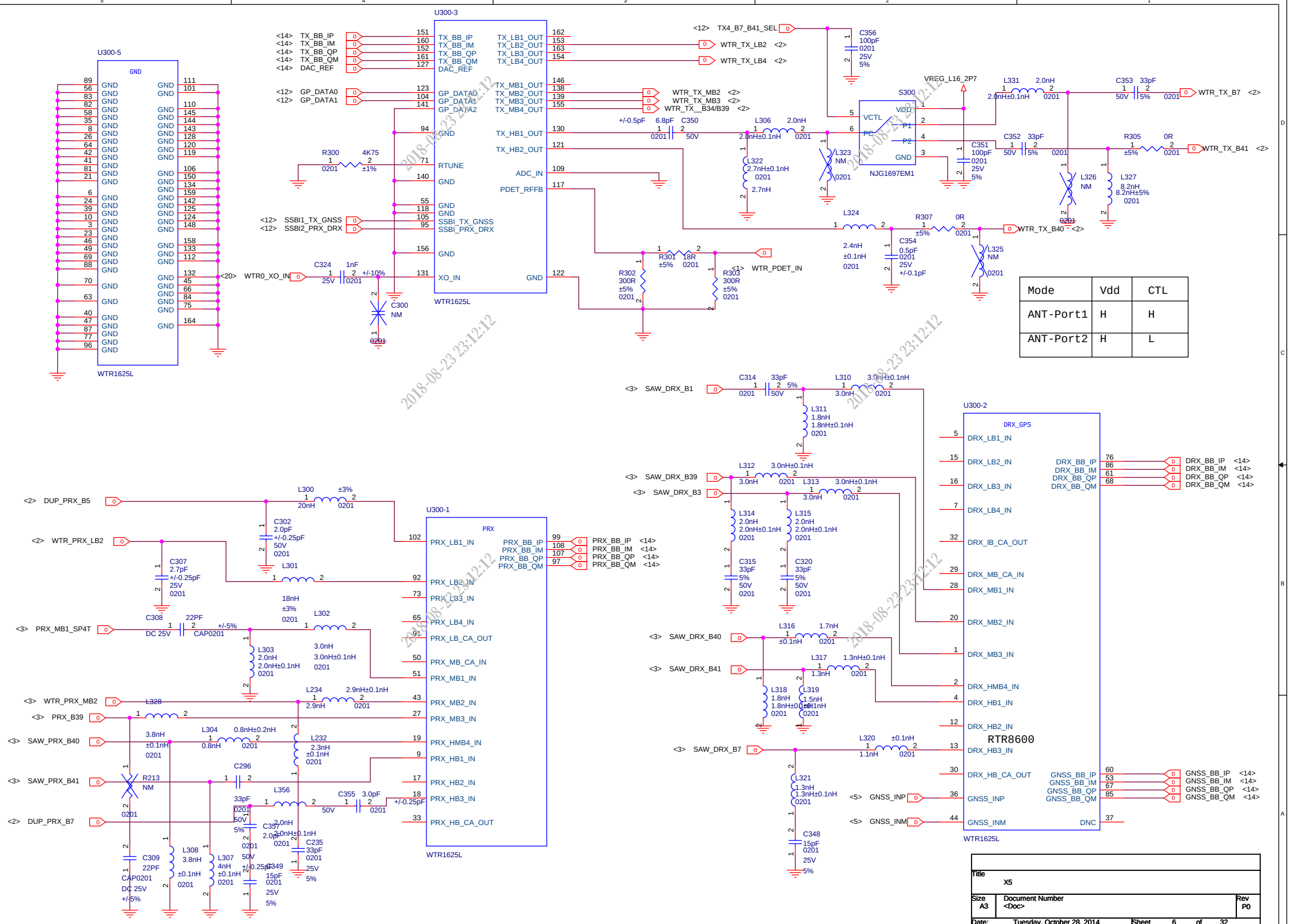

Mode	Vdd	CTL
ANT-Port1	H	H
ANT-Port2	H	L

Title	X5	
Size A3	Document Number <Doc>	Rev P0
Date: Tuesday, October 28, 2014	Sheet 6 of 32	

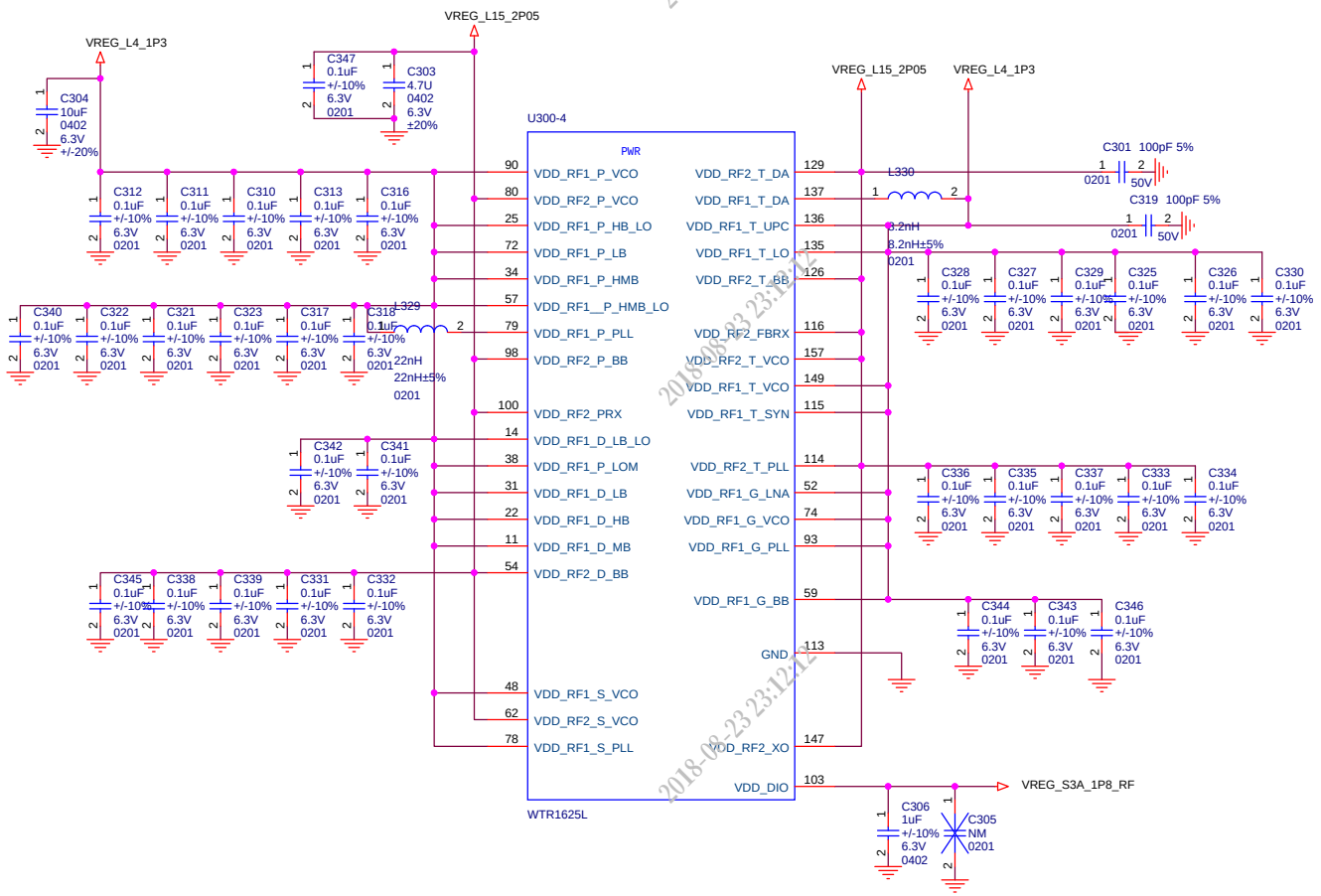

GROUP	NAME	PIN	NET
1	VDD_RF2_D_BB	54	VREG_L15_2P05
2	VDD_RF2_T_DA	129	
3	VDD_RF2_P_BB VDD_RF2_T_BB	98 126	
4	VDD_RF2_P_VCO VDD_RF2_S_VCO VDD_RF2_T_VCO	80 62 157	
5	VDD_RF2_T_PLL	114	
6	VDD_RF2_XO	147	
7	VDD_RF2_FBRX	116	
8	VDD_RF2_PRX	100	
9	VDD_RF1_P_PLL VDD_RF1_S_PLL VDD_RF1_S_VCO VDD_RF1_P_VCO	79 78 48 90	VREG_L4_1P3
10	VDD_RF1_T_DA	137	
11	VDD_RF1_T_VCO VDD_RF1_T_SYN	149 115	
12	VDD_RF1_T_LO VDD_RF1_T_UPC	135 136	
13	VDD_RF1_P_HB_LO	25	
14	VDD_RF1_D_LB	31	
15	VDD_RF1_P_LB	72	
16	VDD_RF1_D_LOM	38	
17	VDD_RF1_D_LB_LO	14	
18	VDD_RF1_D_MB	11	
19	VDD_RF1_D_HB	22	
20	VDD_RF1_P_HMB_LO	57	
21	VDD_RF1_P_HMB	34	
22	VDD_RF1_G_LNA VDD_RF1_G_BB	52 59	
23	VDD_RF1_G_PLL VDD_RF1_G_VCO	93 74	
24	VDD_DIO	103	VREG_S3A_1P8_RF

RTR8600 BYPASS

Title	X5	
Size A3	Document Number <Doc>	Rev P0
Date: Tuesday, October 28, 2014	Sheet 7 of 32	

2018-08-23 23:12:12

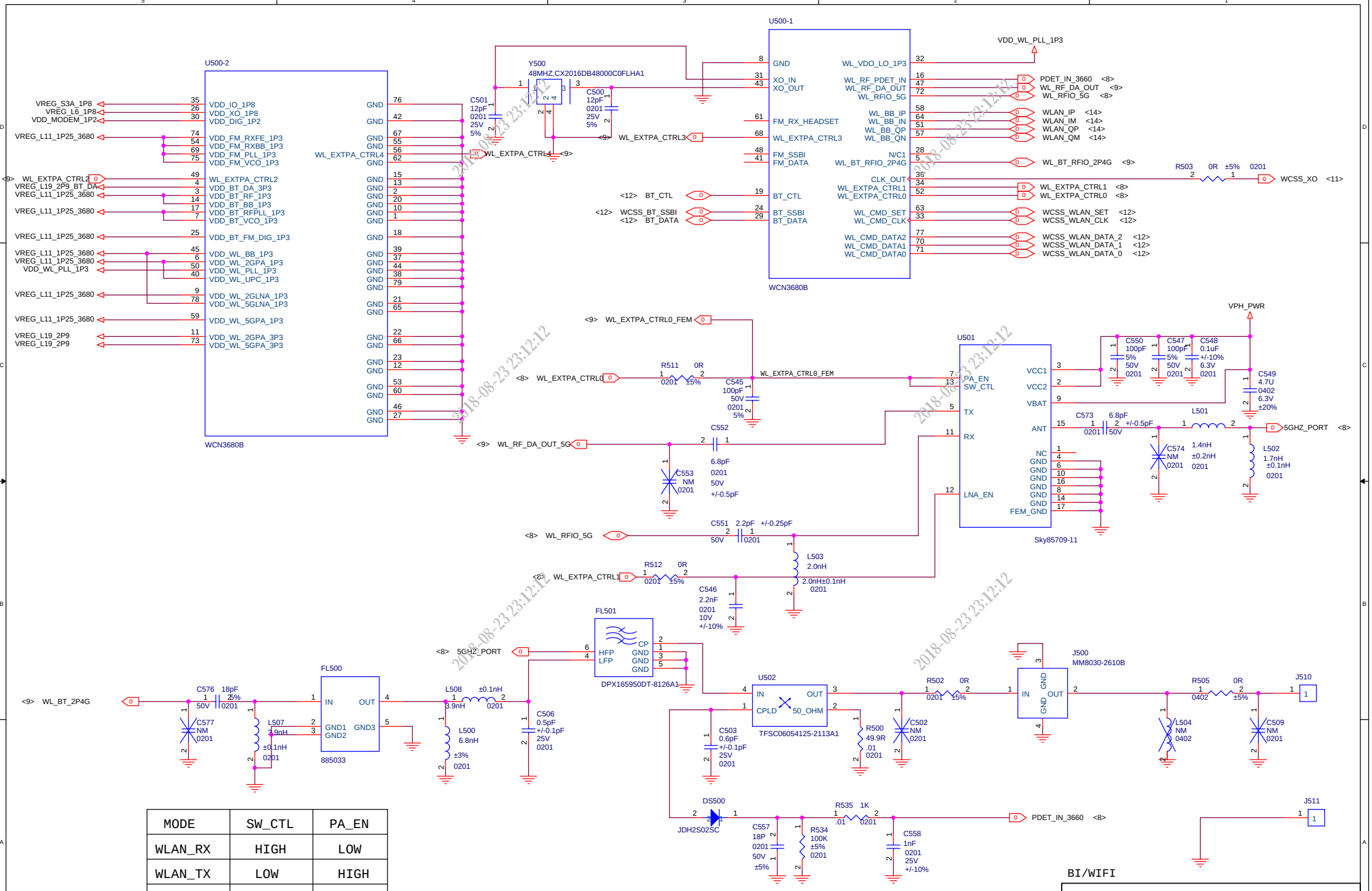

MODE	SW_CTL	PA_EN
WLAN_RX	HIGH	LOW
WLAN_TX	LOW	HIGH
WLAN_OFF	LOW	LOW

BI/WIFI

Title	X5	
Size A3	Document Number <Doc>	Rev P0
Date: Tuesday, October 28, 2014	Sheet 8 of 32	

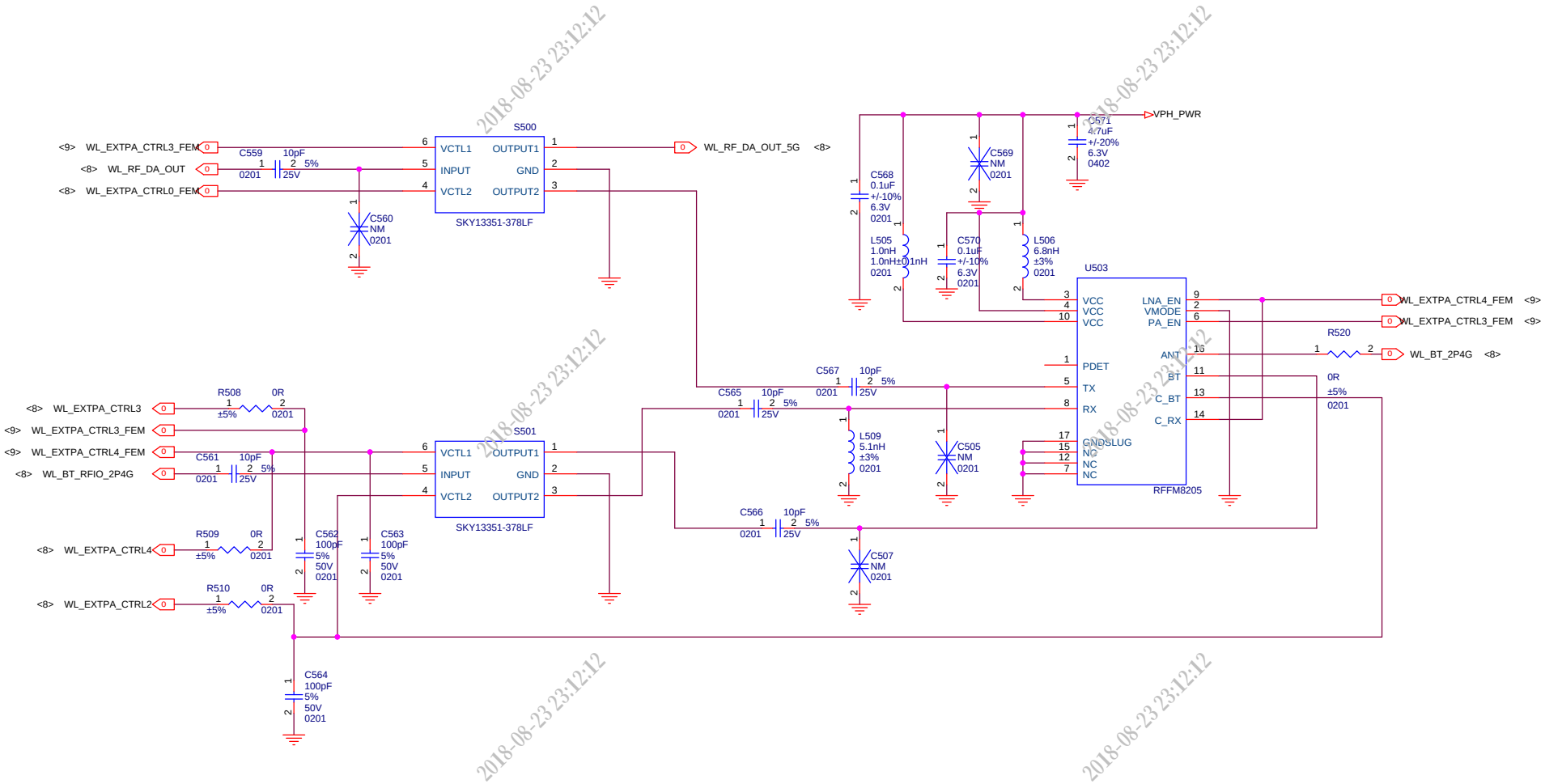

2018-08-23 23:12:12

Title	X5	
Size A3	Document Number <Doc>	Rev <RevCode>
Date: Tuesday, October 28, 2014	Sheet 9 of 32	

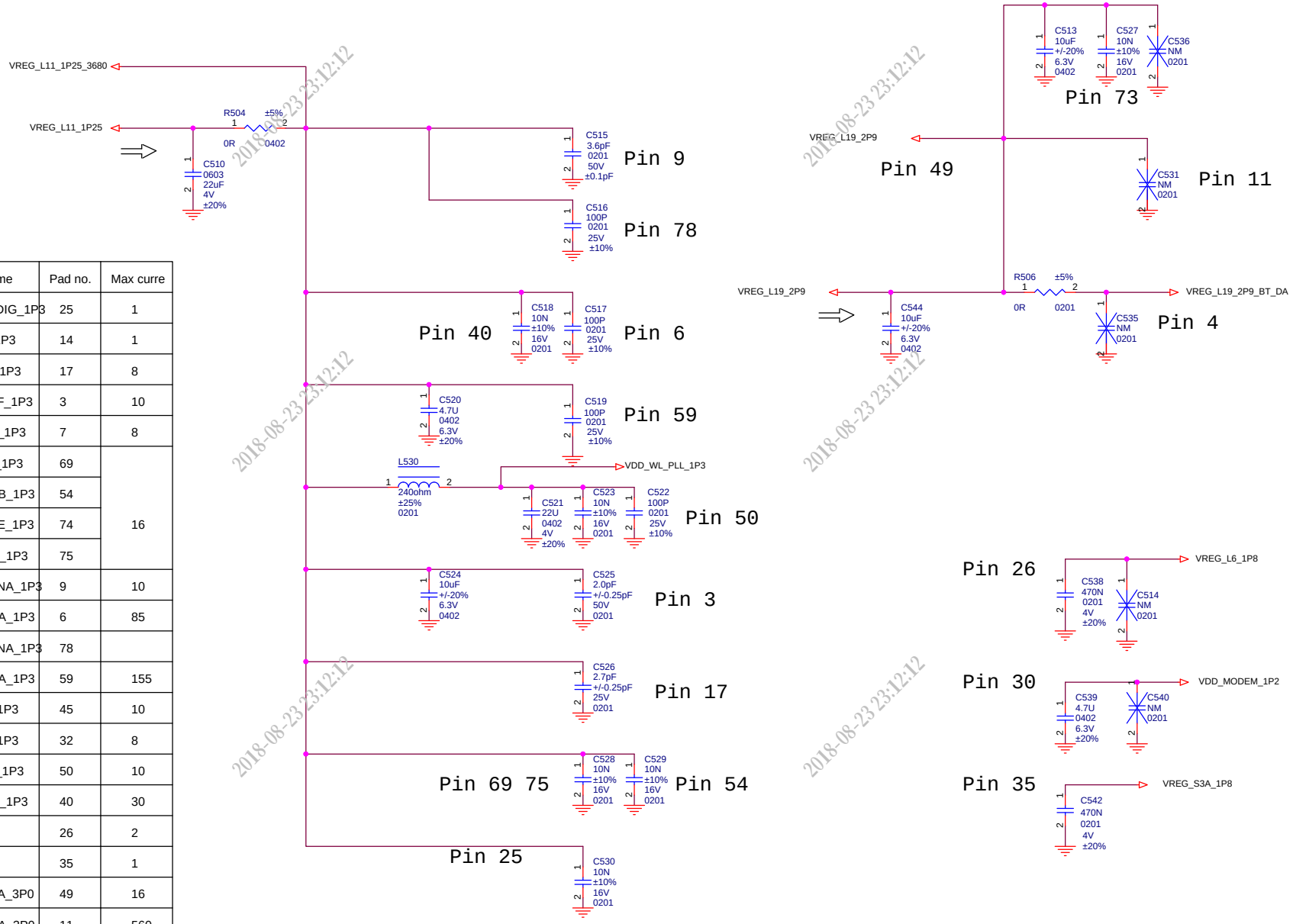

Voltage	Pad name	Pad no.	Max curre
1P3	VDD_BT_FM_DIG_1P3	25	1
	VDD_BT_BB_1P3	14	1
	VDD_BT_PLL_1P3	17	8
	VDD_BT_RXRF_1P3	3	10
	VDD_BT_VCO_1P3	7	8
	VDD_FM_PLL_1P3	69	16
	VDD_FM_RXBB_1P3	54	
	VDD_FM_RXFE_1P3	74	
	VDD_FM_VCO_1P3	75	
	VDD_WL_2GLNA_1P3	9	10
	VDD_WL_2GPA_1P3	6	85
	VDD_WL_5GLNA_1P3	78	
	VDD_WL_5GPA_1P3	59	155
	VDD_WL_BB_1P3	45	10
	VDD_WL_LO_1P3	32	8
	VDD_WL_PLL_1P3	50	10
	VDD_WL_UPC_1P3	40	30
1P8	VDD_XO_1P8	26	2
	VDD_IO_1P8	35	1
3P0	VDD_FM_TXDA_3P0	49	16
	VDD_WL_2GPA_3P0	11	560
	VDD_WL_5GPA_3P0	73	600
	VDD_BT_TXRF_3P0	4	45
1P2	VDD_DIG_1P2	30	4

BT/FM/WLAN DECOUP

Title	X5	
Size A3	Document Number <Doc>	Rev P0
Date: Tuesday, October 28, 2014	Sheet 10 of 32	

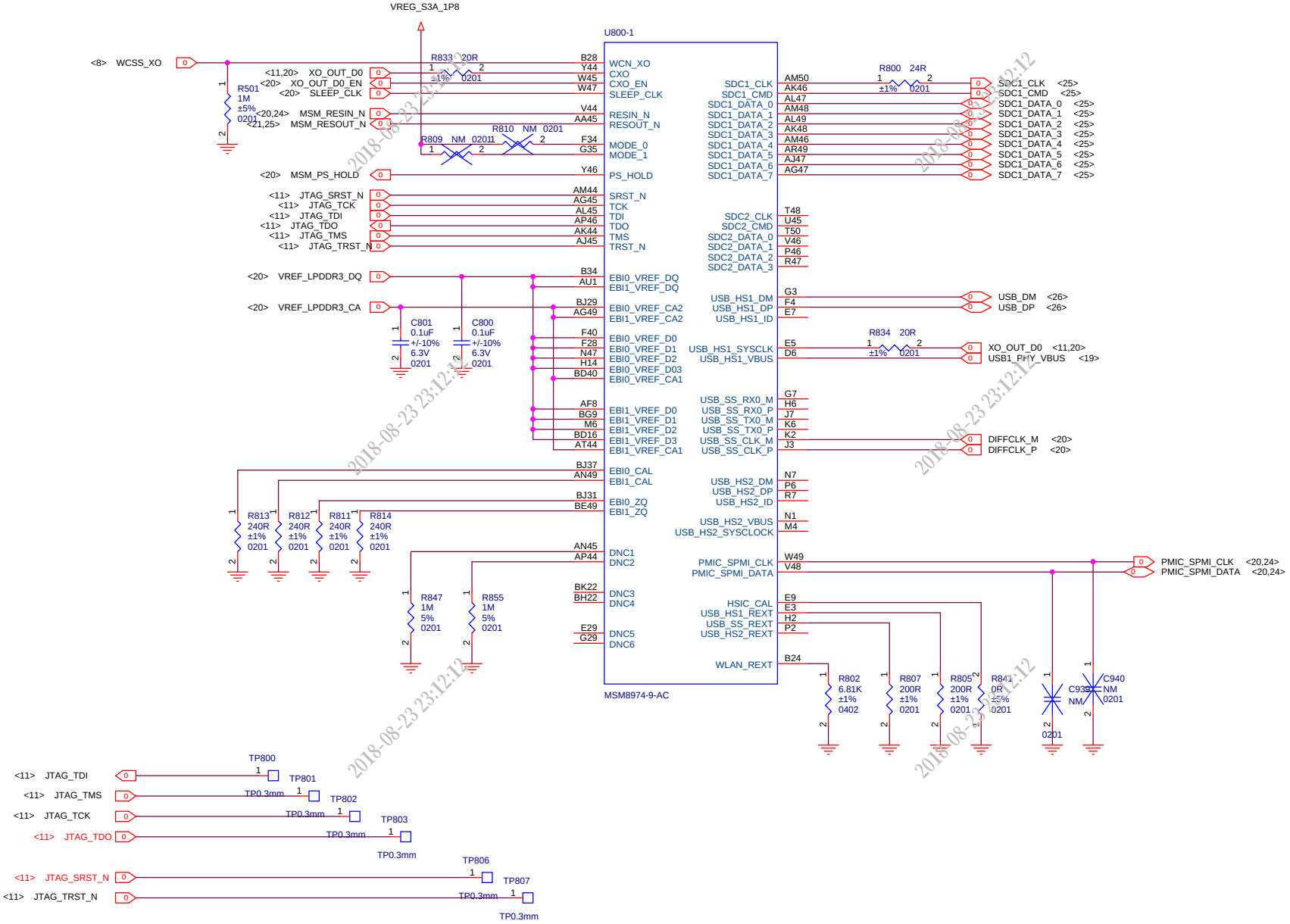

MSM8974 (1 OF 8) - CONTROL

Title	X5	
Size A3	Document Number <Doc>	Rev P0
Date: Tuesday, October 28, 2014	Sheet 11 of 32	

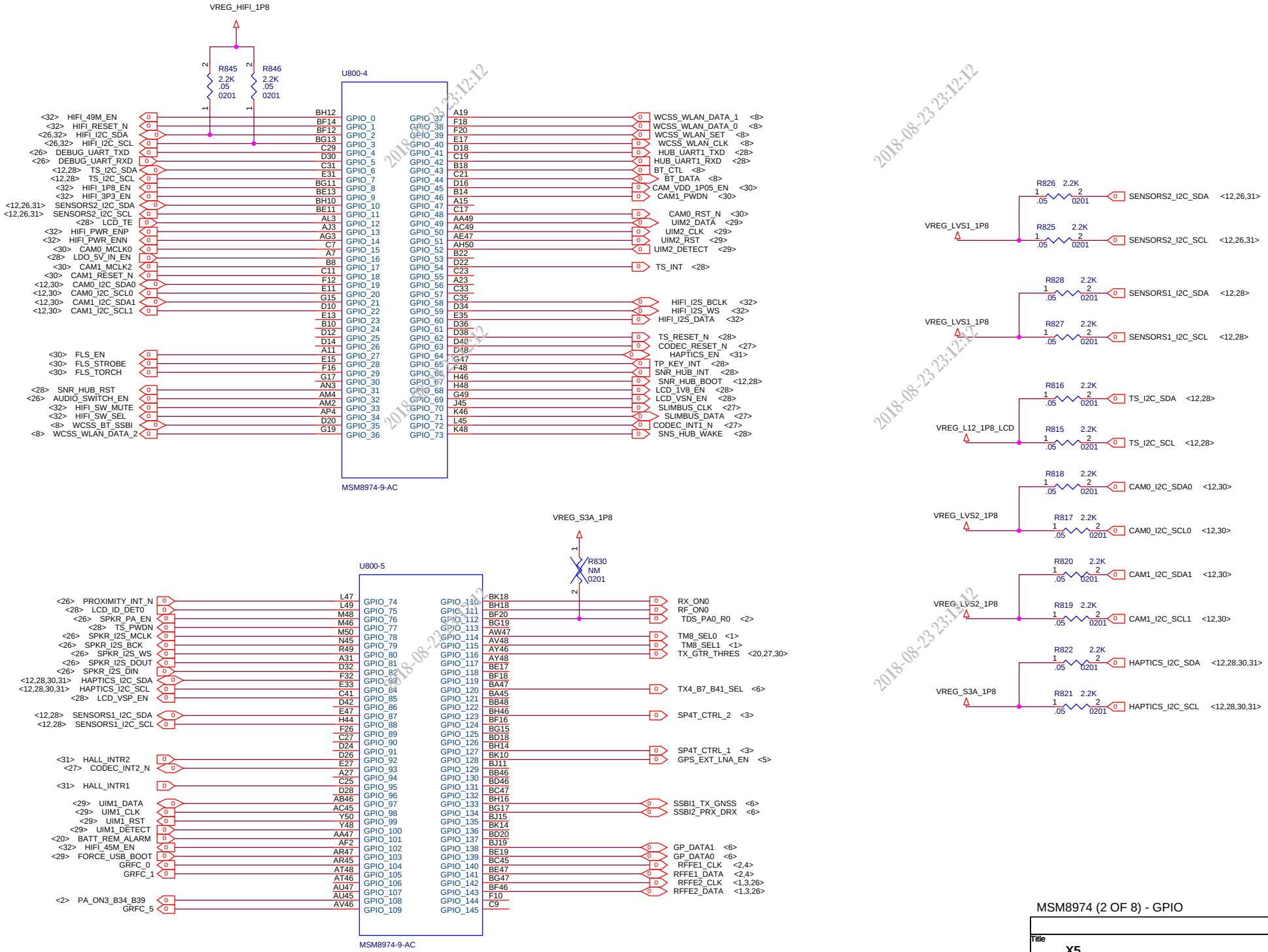

MSM8974 (2 OF 8) - GPIO

Title	X5	
Size A3	Document Number <Doc>	Rev P0
Date: Tuesday, October 28, 2014	Sheet 12 of 32	

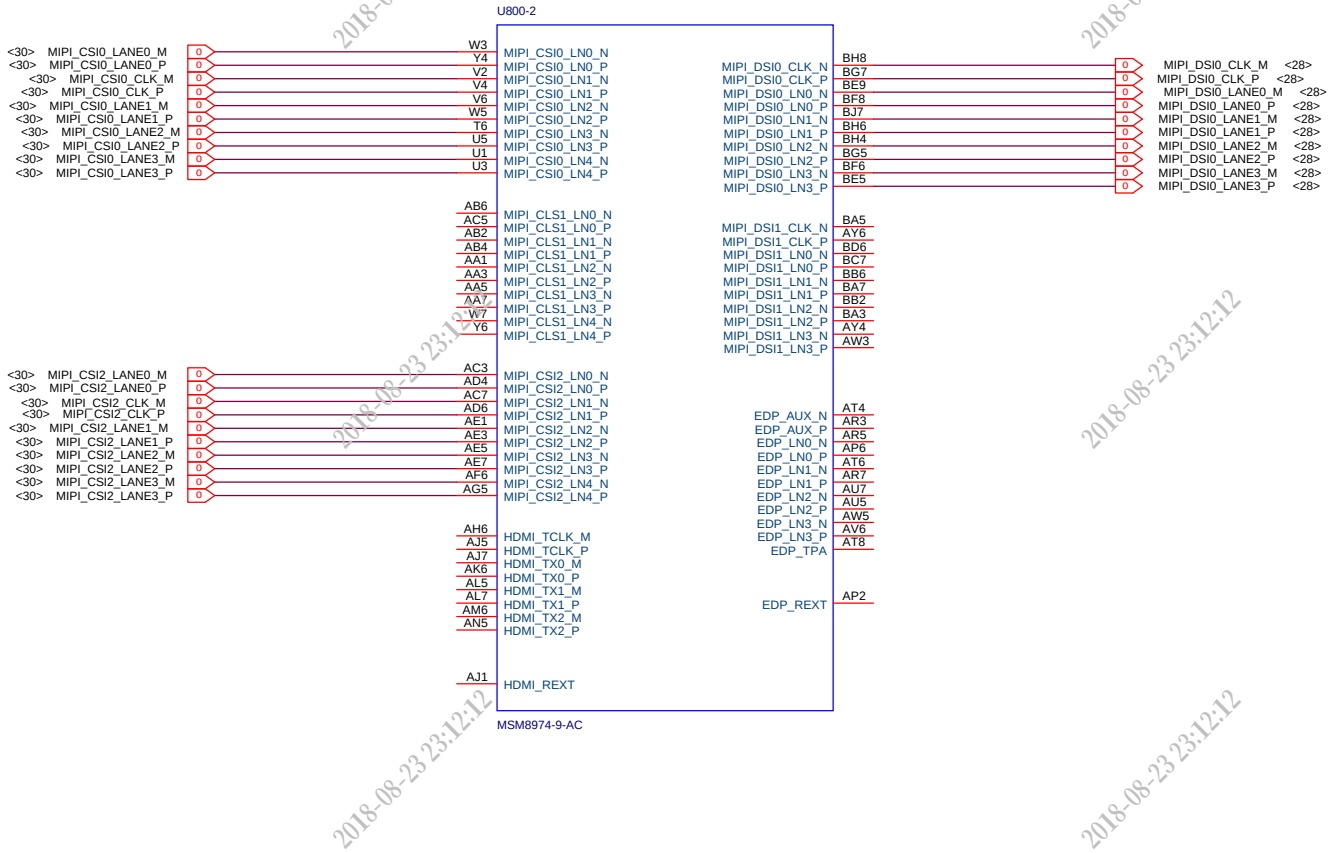

MSM8974 (3 OF 8) - MSM8974 MIPI DSI,CSI and HDMI

Title	X5	
Size A3	Document Number <Doc>	Rev P0
Date: Tuesday, October 28, 2014	Sheet 13 of 32	

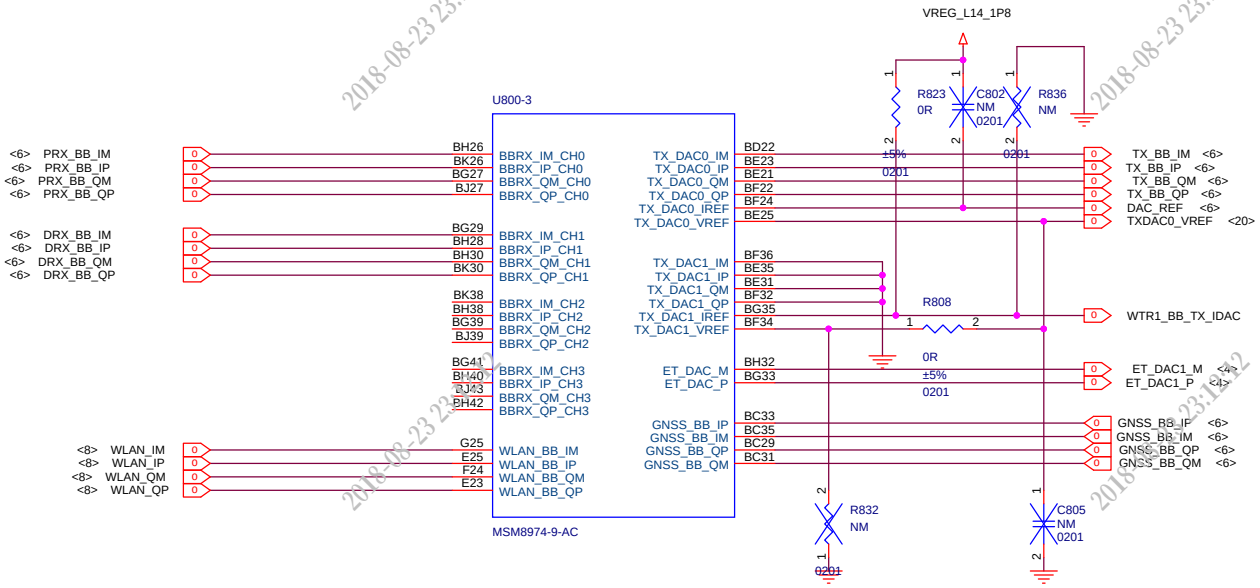

MSM8974 (4 OF 8) - MSM8974 RF INTERFACE

Title	X5	
Size A3	Document Number <Doc>	Rev P0
Date: Tuesday, October 28, 2014	Sheet 14 of 32	

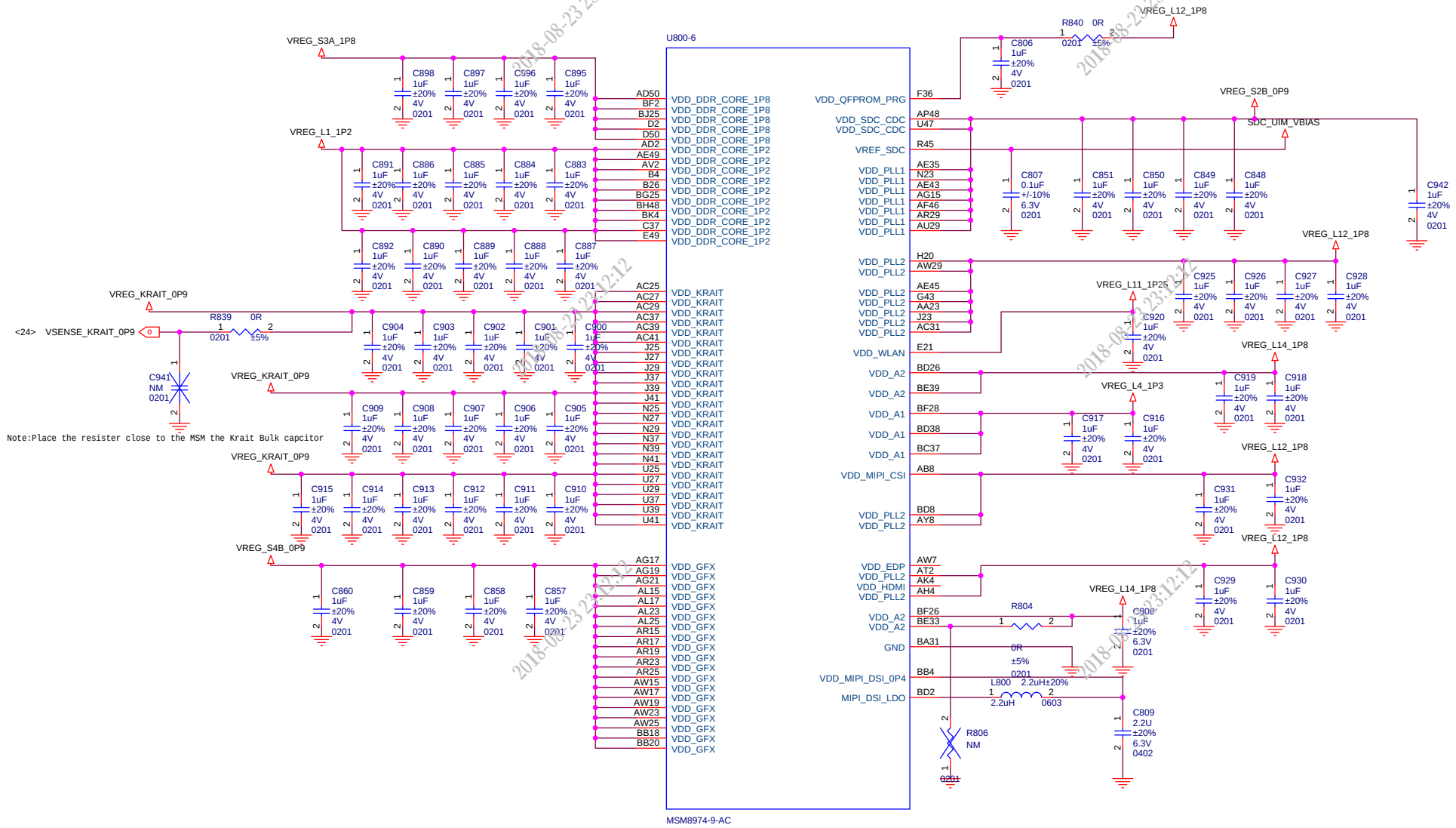

MSM8974 (5 OF 8) - MSM8974 POWER1

Title	X5	
Size A3	Document Number <Doc>	Rev P0
Date: Tuesday, October 28, 2014	Sheet 15 of 32	

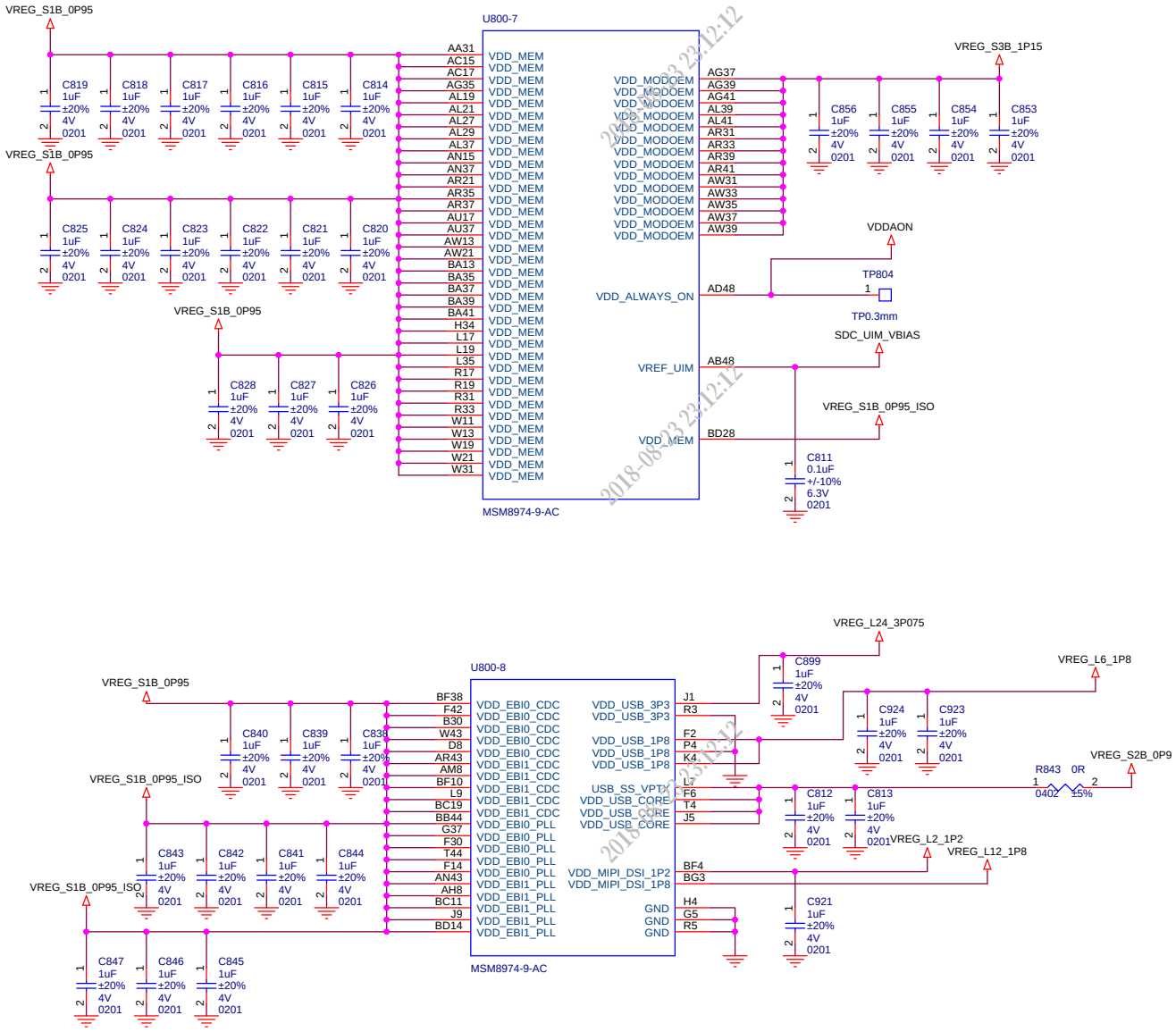

MSM8974 (6 OF 8) - MSM8974 POWER2

Title	X5	
Size A3	Document Number <Doc>	Rev P0
Date: Tuesday, October 28, 2014	Sheet 16 of 32	

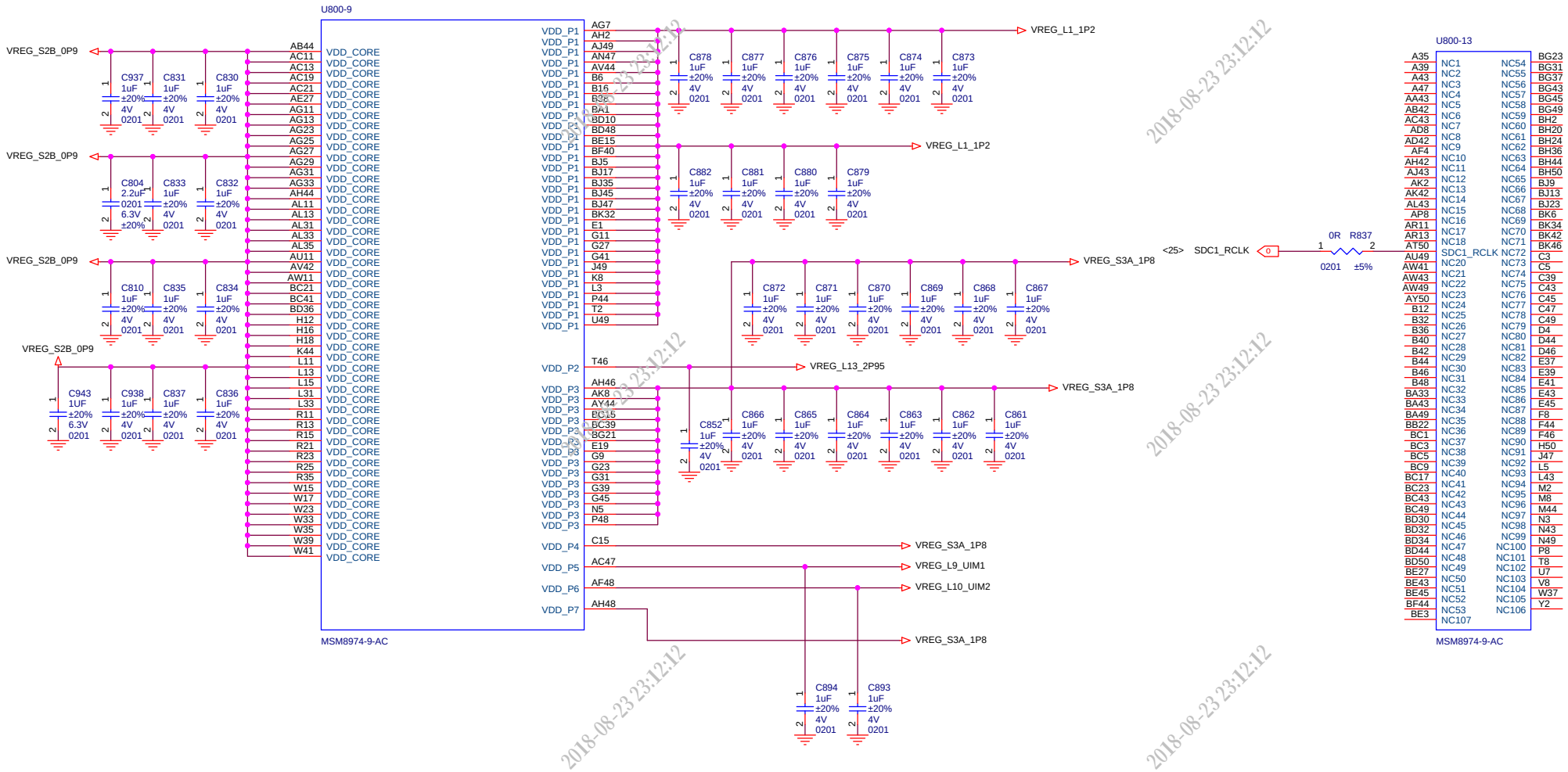

MSM8960 (6 OF 8) - MSM8974 POWER3

Title	X5	
Size A3	Document Number <Doc>	Rev P0
Date: Tuesday, October 28, 2014	Sheet 17 of 32	

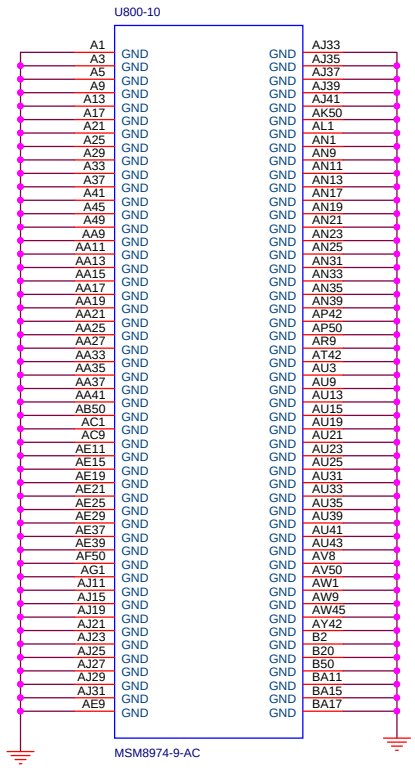

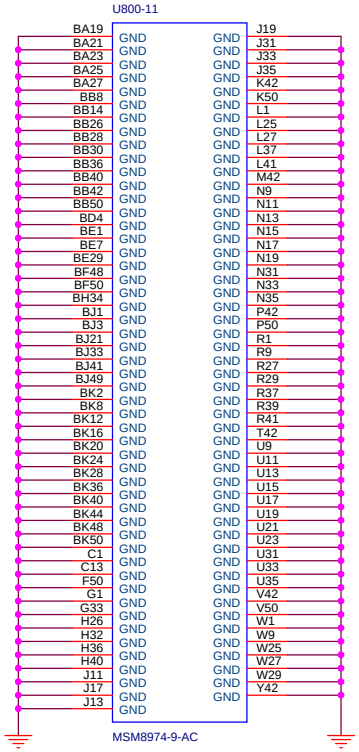

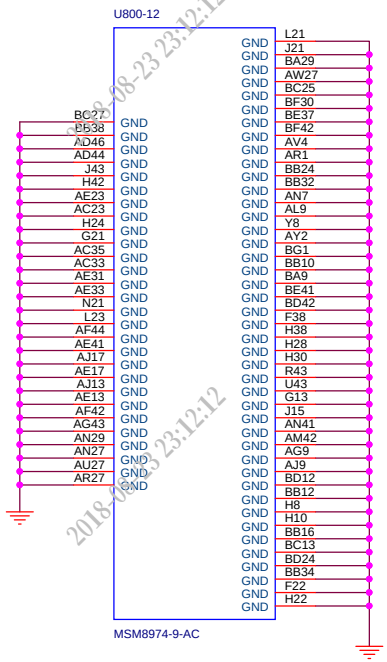

2018-08-23 23:12:12

MSM8974 (8 OF 8) - MSM8974 GND

Title	X5	
Size A3	Document Number <Doc>	Rev P0
Date: Tuesday, October 28, 2014	Sheet 18 of 32	

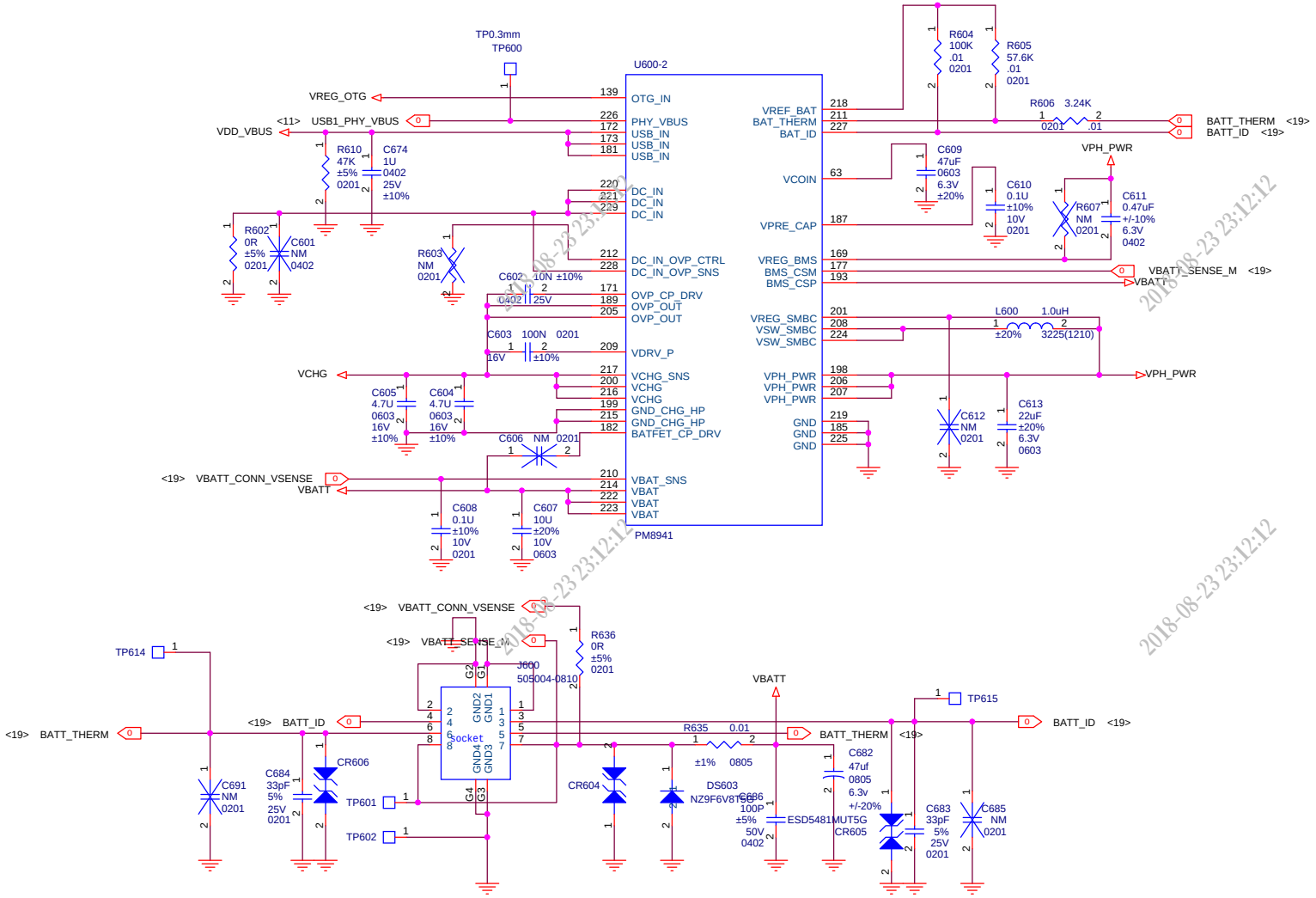

PM8941(1 OF 5) - CHARGING

Title	X5	
Size A3	Document Number <Doc>	Rev P0
Date: Tuesday, October 28, 2014	Sheet 19 of 32	

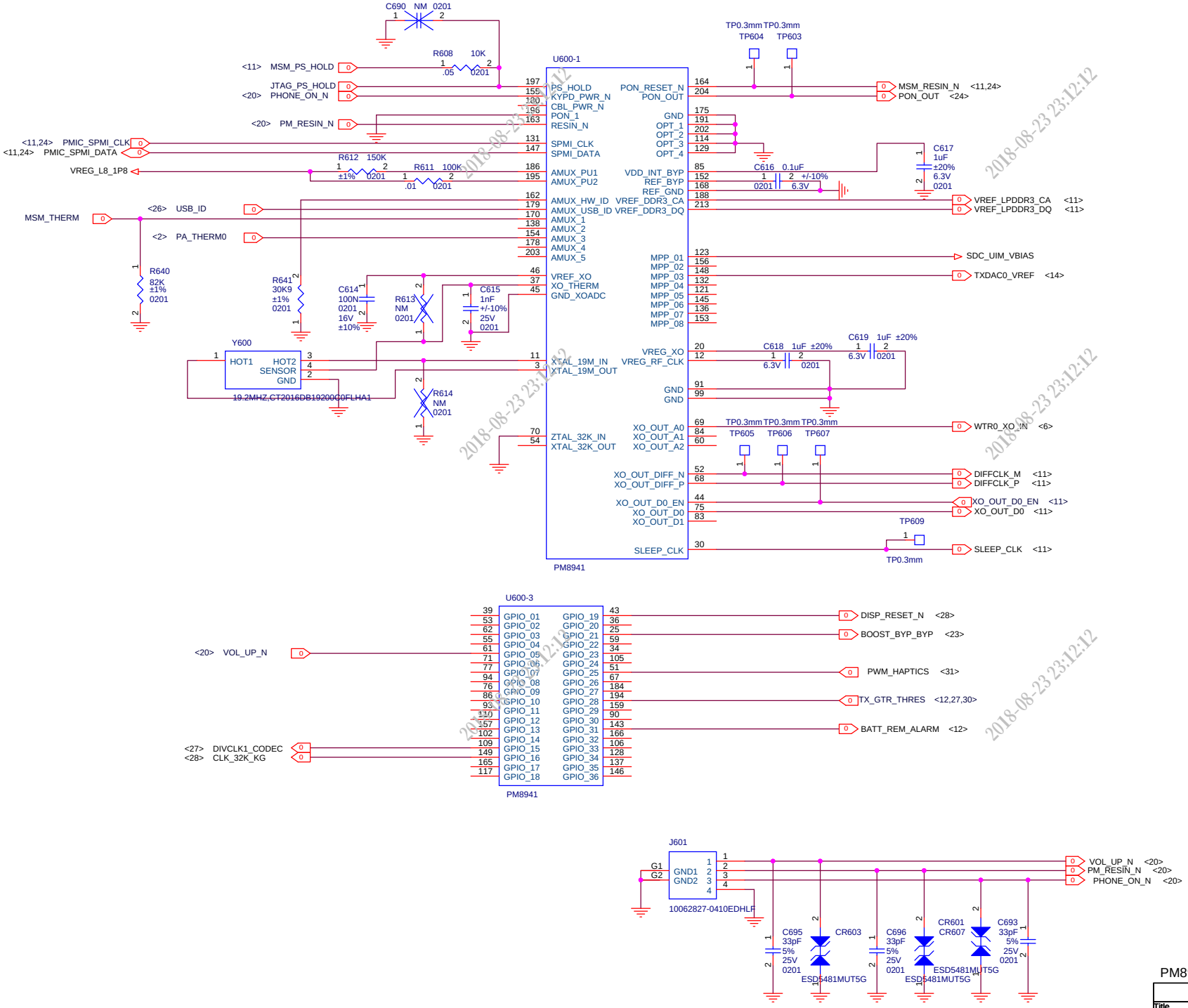

PM8941(2 OF 5)-AMUX,CLK,GPIO

Title	X5	
Size A3	Document Number <Doc>	Rev P0
Date: Tuesday, October 28, 2014	Sheet 20 of 32	

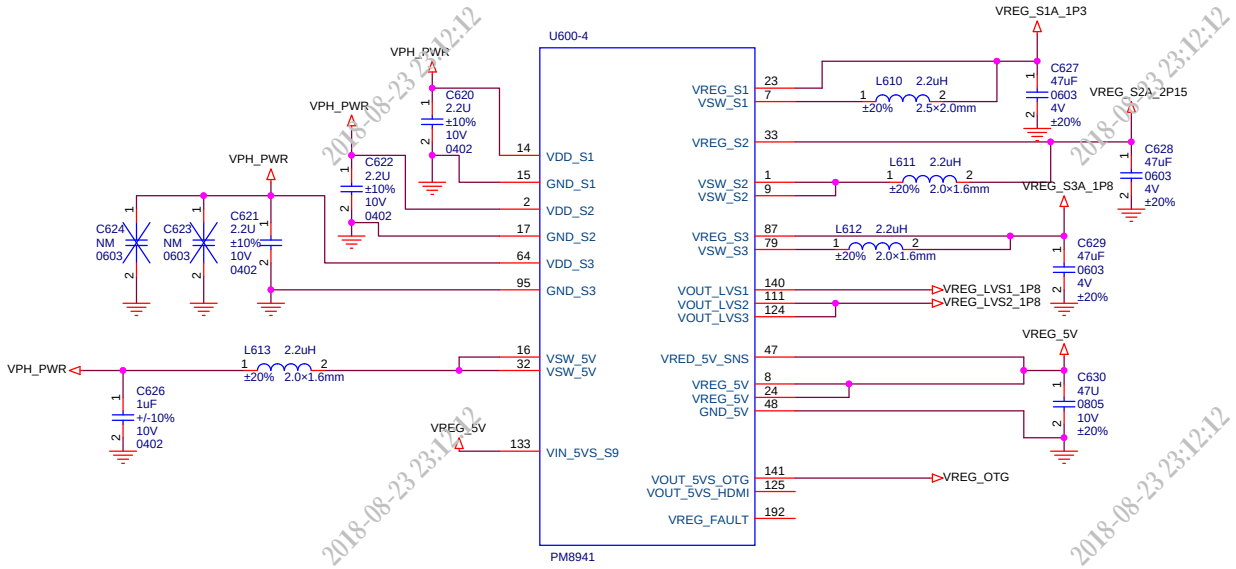

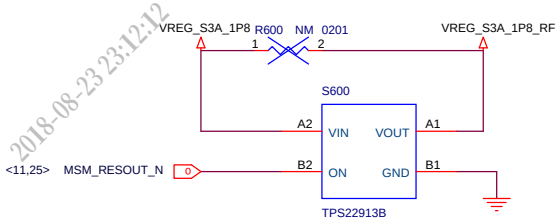

2018-08-23 23:12:12

PM8941(3 OF 5) - SMPS

Title	X5	
Size A3	Document Number <Doc>	Rev P0
Date: Tuesday, October 28, 2014	Sheet 21 of 32	

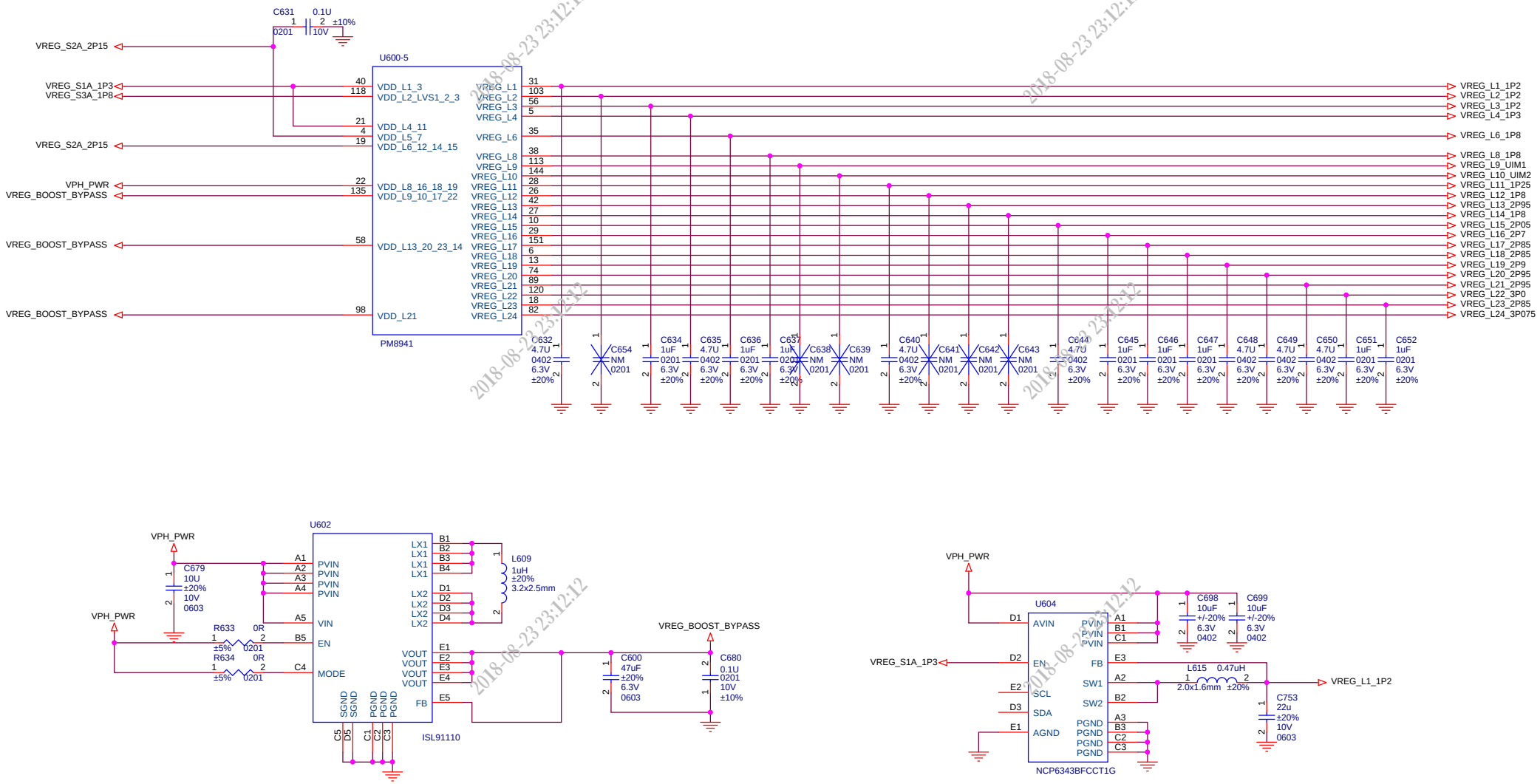

PM8941(4 OF 5) - LDO

Title	X5	
Size A3	Document Number <Doc>	Rev P0
Date: Tuesday, October 28, 2014	Sheet 22 of 32	

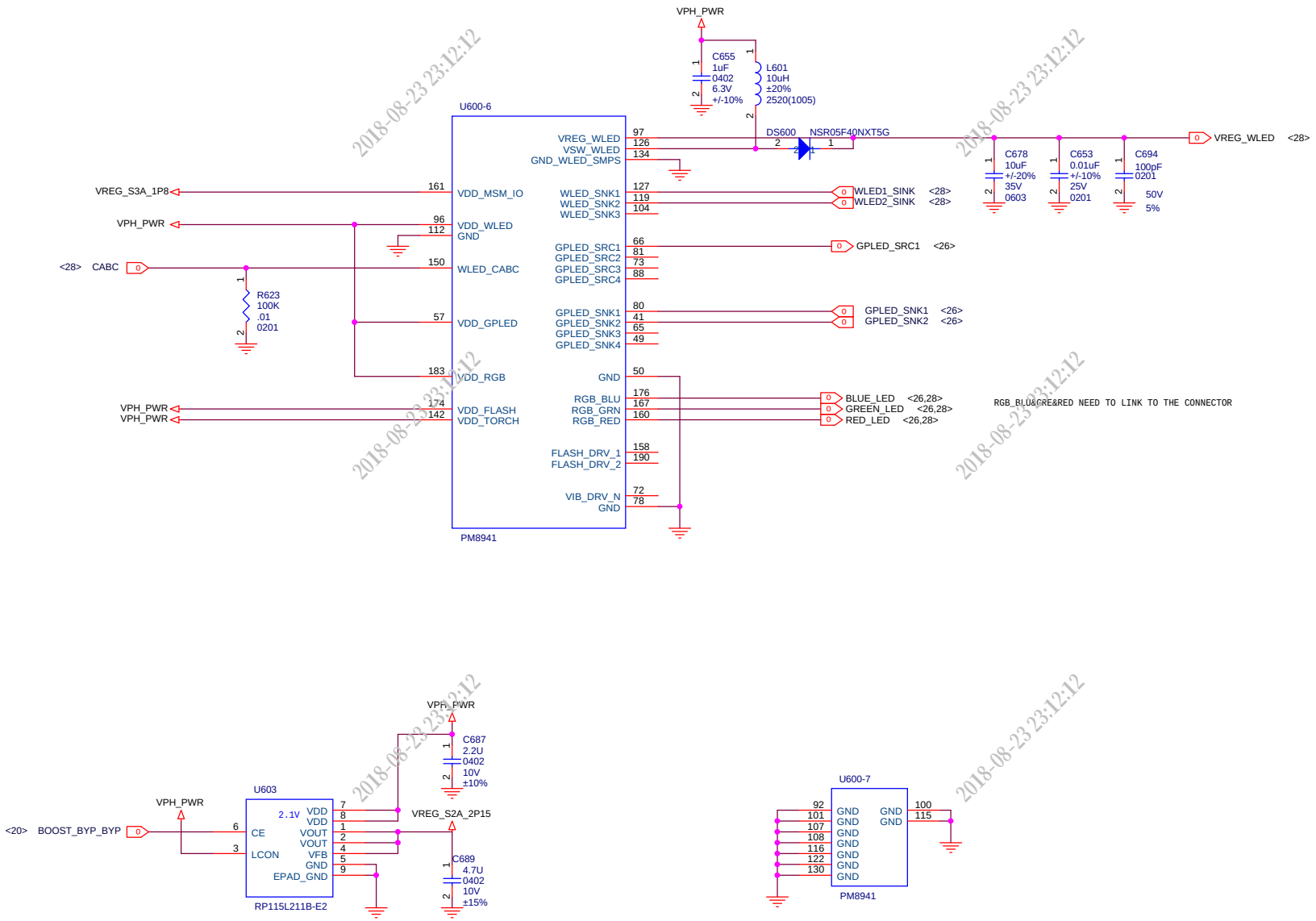

PM8941(5 OF 5) - LED&GND

Title	X5	
Size A3	Document Number <Doc>	Rev P0
Date: Tuesday, October 28, 2014	Sheet 23 of 32	

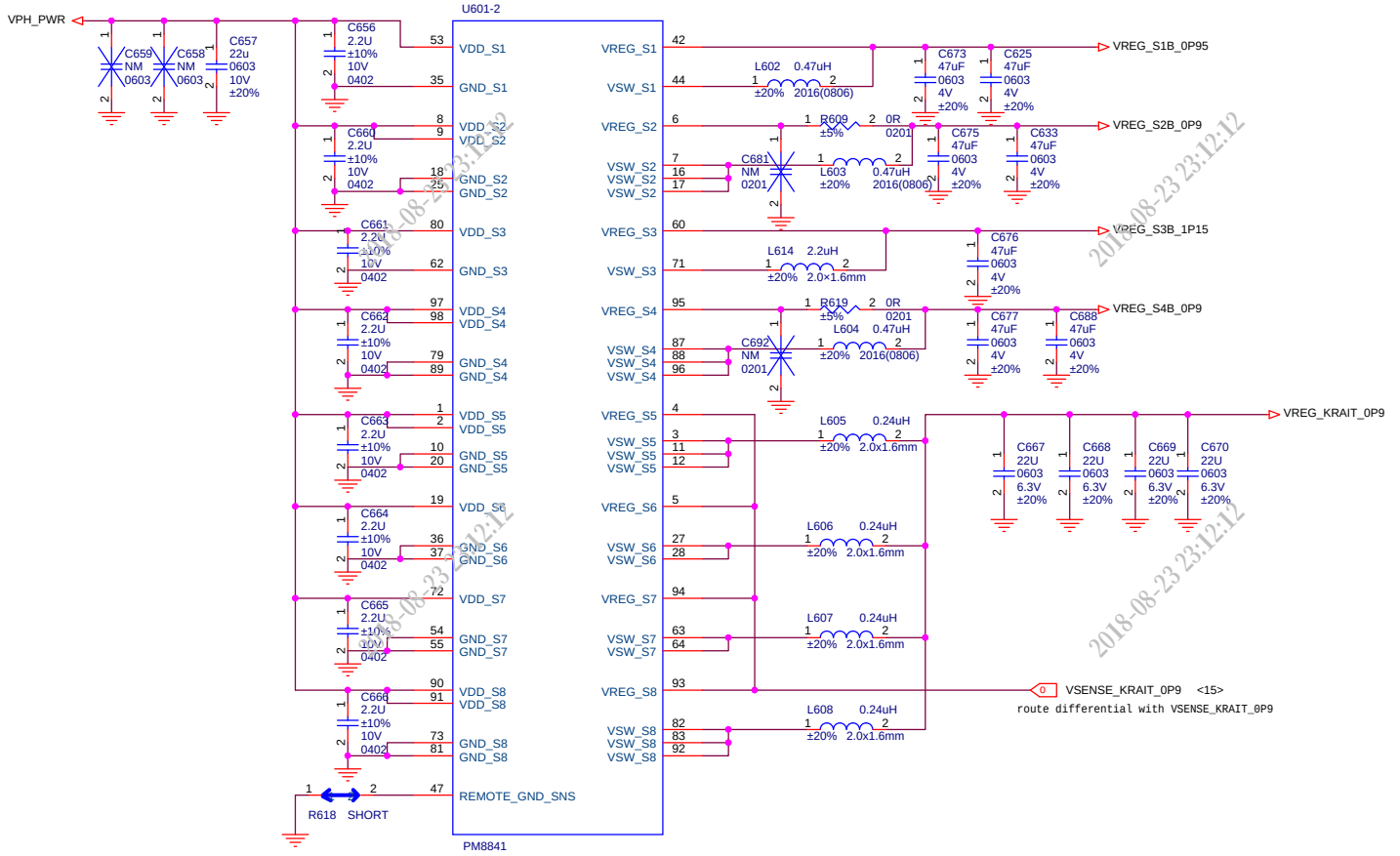

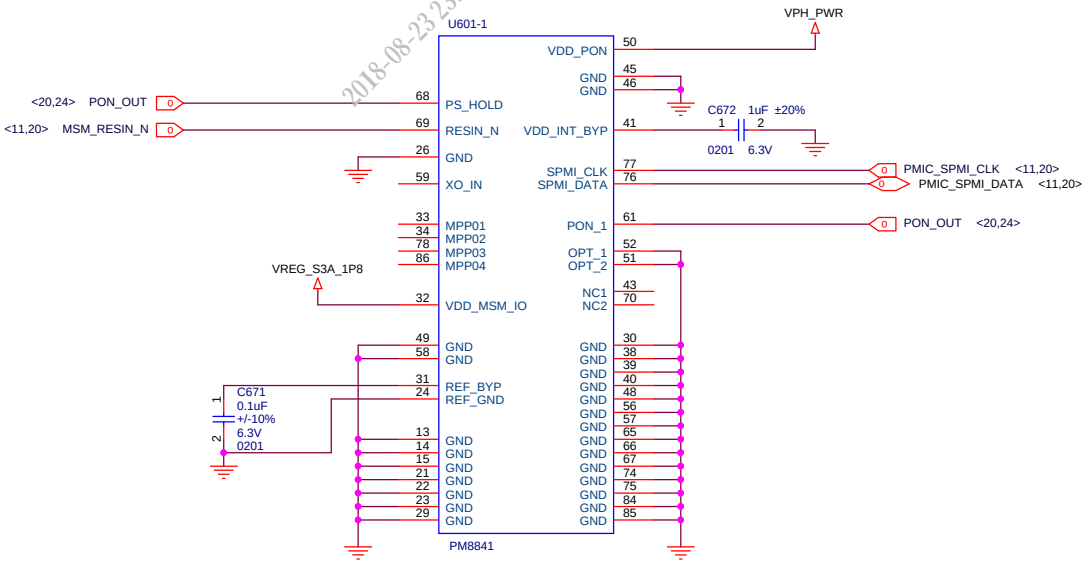

2018-08-23 23:12:12

PM8841 - CONTROL AND VREG

Title	X5	
Size A3	Document Number <Doc>	Rev P0
Date: Tuesday, October 28, 2014	Sheet 24 of 32	

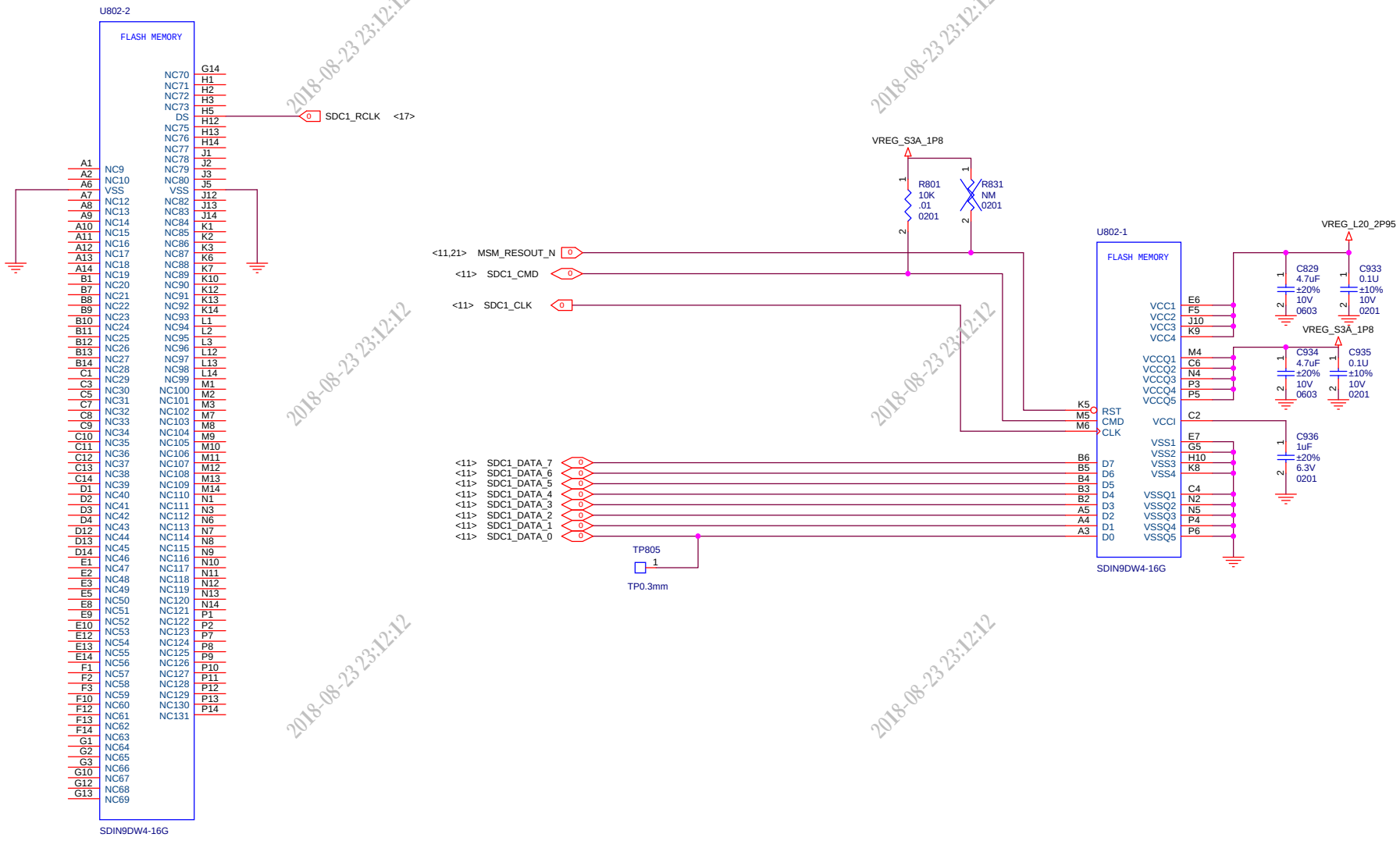

2018-08-23 23:12:12

MEMORY

Title	X5		
Size A3	Document Number <Doc>		Rev P0
Date: Tuesday, October 28, 2014	Sheet 25 of 32		

HANDSET

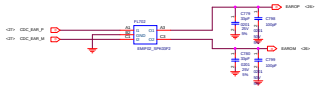

AUX Mic

HEADSET

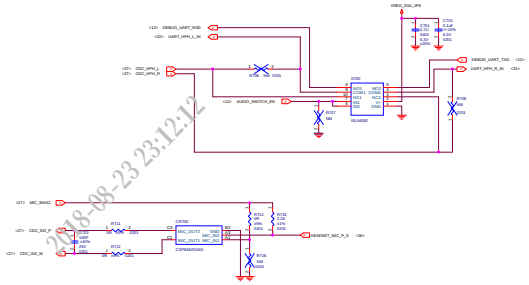

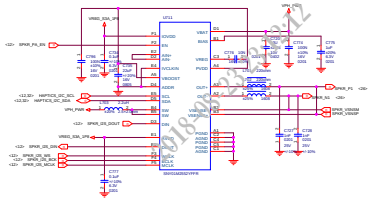

Connector

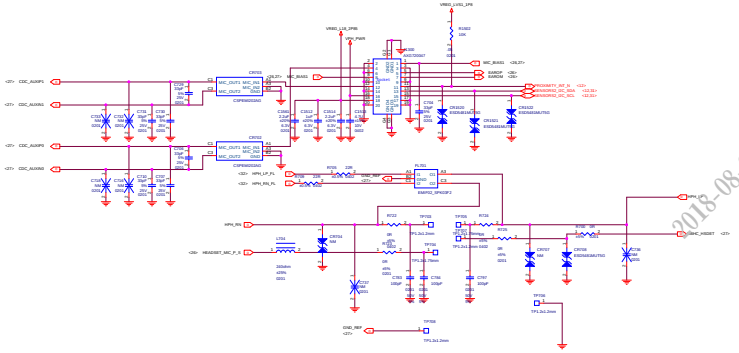

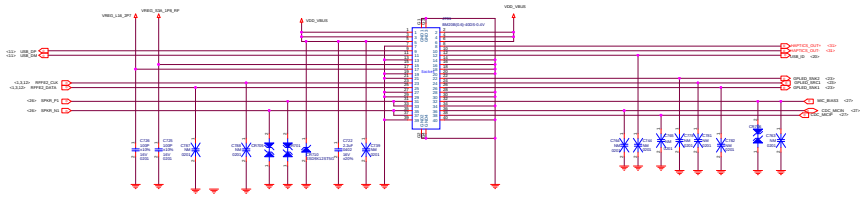

Voice Processer

2018-08-23 23:12:12

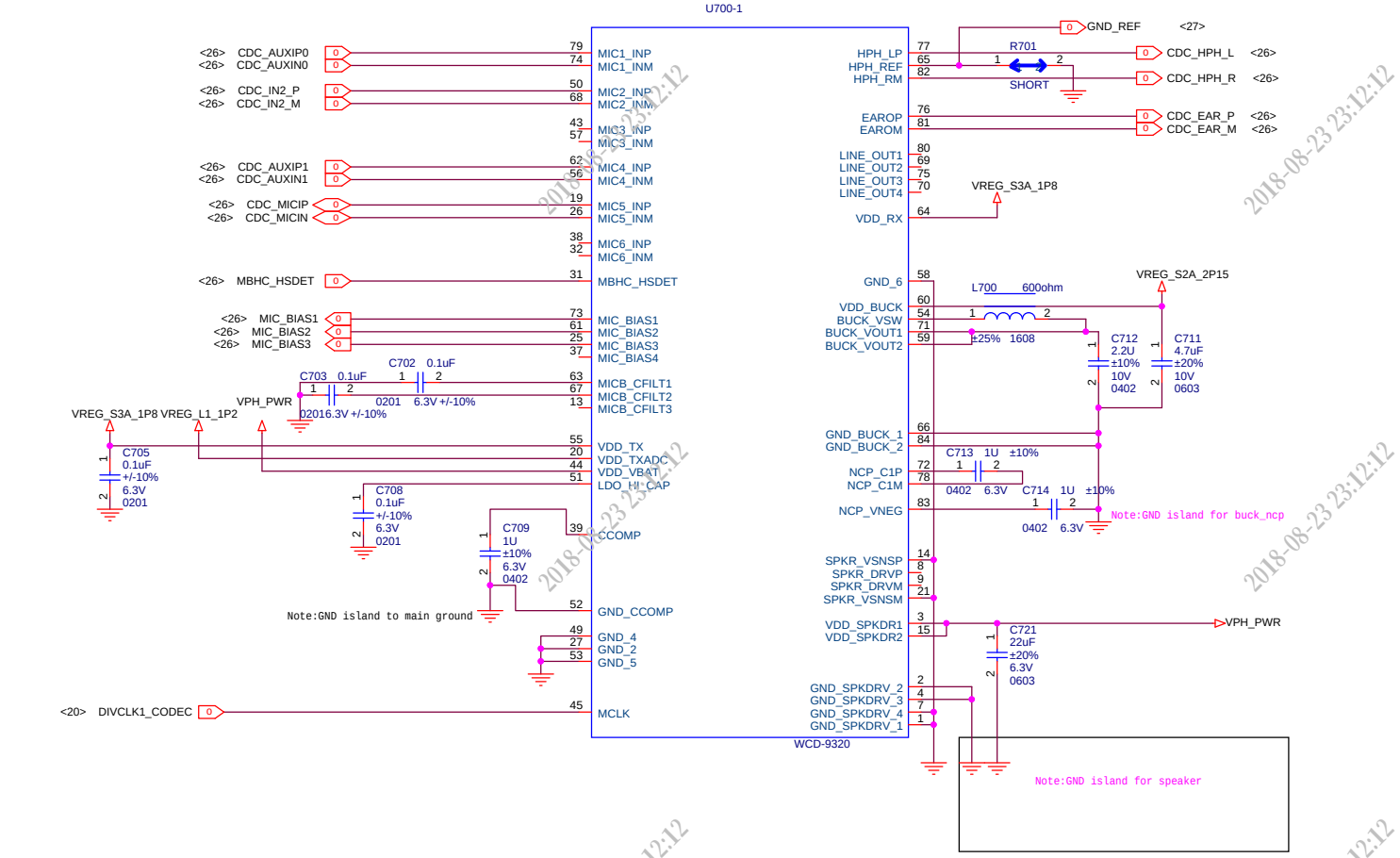

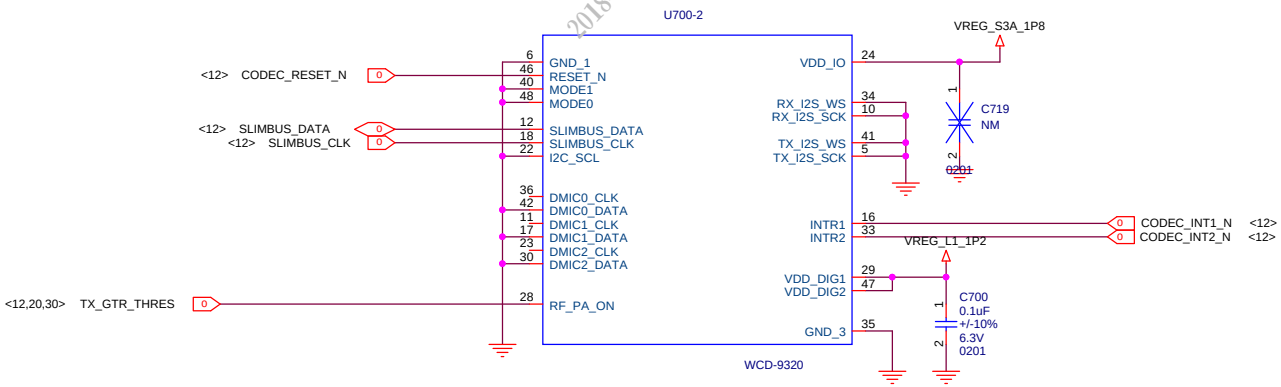

WCD9320

Title	X5	
Size A3	Document Number <Doc>	Rev P0
Date: Tuesday, October 28, 2014	Sheet 27 of 32	

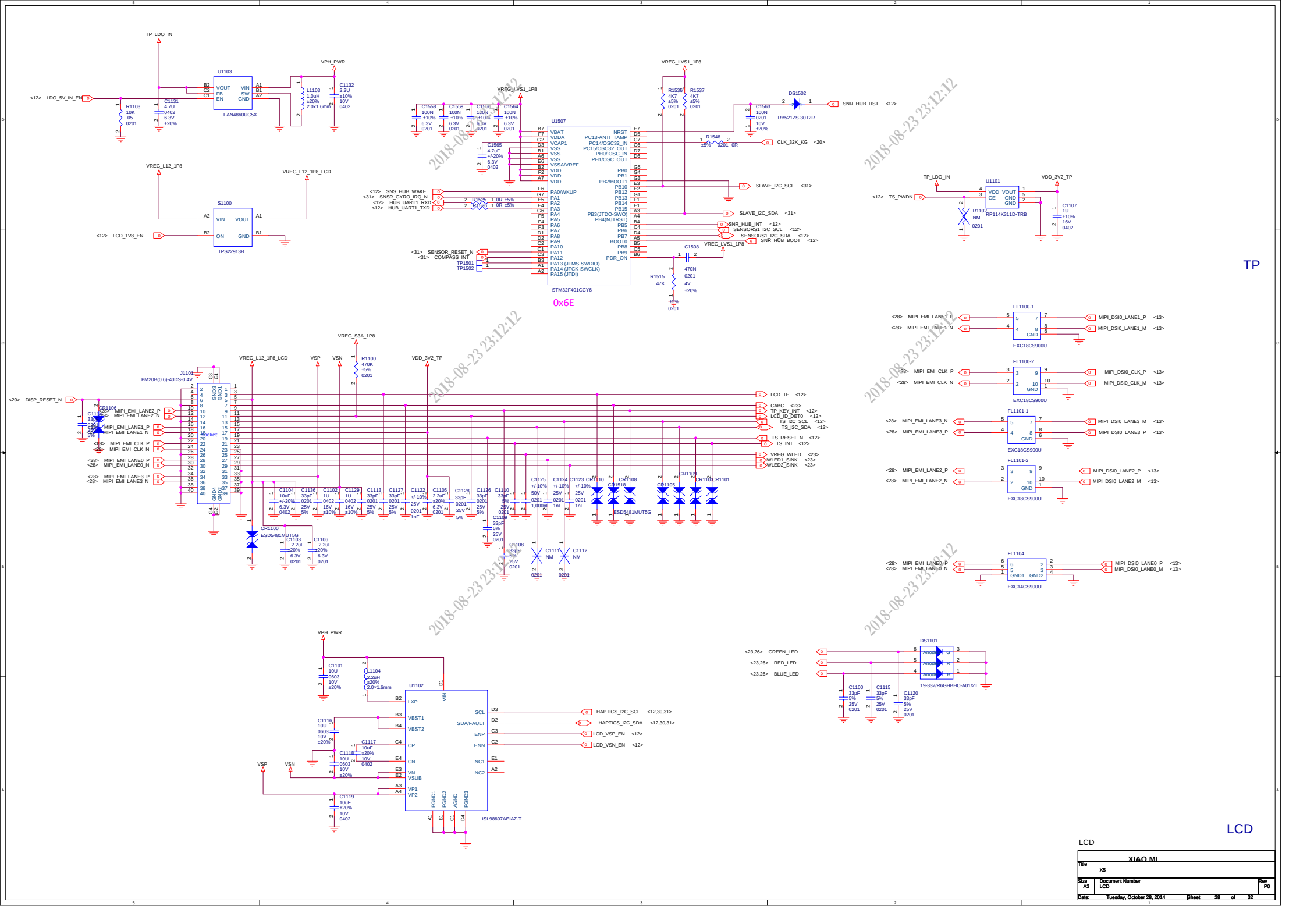
TP
LCD
U1103
FAN4860UC5X
U1507
STM32F401CCY6
0x6E
S1100
TPS22913B
U1101
RP114K311D-TRB
DS1502
RB521ZS-30T2R
FL1100-1
EXC18CS900U
FL1100-2
EXC18CS900U
FL1101-1
EXC18CS900U
FL1101-2
EXC18CS900U
FL1104
EXC14CS900U
DS1101
19-337/R6GHBHC-A01/2T
J1101
BM20B(0.6)-40DS-0.4V
Socket
U1102
ISL98607AEIAZ-T
CR1100
ESD5481MUT5G
CR1101
ESD5481MUT5G
CR1105
CR1108
CR1109
CR1110
CR1518
TP_LDO_IN
VPH_PWR
VREG_L12_1P8
VREG_L12_1P8_LCD
VREG_S3A_1P8
VREG_LVS1_1P8
VDD_3V2_TP
VSP
VSN
SNR_HUB_RST
CLK_32K_KG
SLAVE_I2C_SCL
SLAVE_I2C_SDA
SNR_HUB_INT
SENSORS1_I2C_SCL
SENSORS1_I2C_SDA
SNR_HUB_BOOT
LDO_5V_IN_EN
LCD_1V8_EN
SNS_HUB_WAKE
SNSR_GYRO_IRQ_N
HUB_UART1_RXD
HUB_UART1_TXD
SENSOR_RESET_N
COMPASS_INT
TS_PWDN
DISP_RESET_N
MIPI_EMI_LANE2_P
MIPI_EMI_LANE2_N
MIPI_EMI_LANE1_P
MIPI_EMI_LANE1_N
MIPI_EMI_CLK_P
MIPI_EMI_CLK_N
MIPI_EMI_LANE0_P
MIPI_EMI_LANE0_N
MIPI_EMI_LANE3_P
MIPI_EMI_LANE3_N
MIPI_DSI0_LANE1_P
MIPI_DSI0_LANE1_M
MIPI_DSI0_CLK_P
MIPI_DSI0_CLK_M
MIPI_DSI0_LANE3_M
MIPI_DSI0_LANE3_P
MIPI_DSI0_LANE2_P
MIPI_DSI0_LANE2_M
MIPI_DSI0_LANE0_P
MIPI_DSI0_LANE0_M
LCD_TE
CABC
TP_KEY_INT
LCD_ID_DET0
TS_I2C_SCL
TS_I2C_SDA
TS_RESET_N
TS_INT
VREG_WLED
WLED1_SINK
WLED2_SINK
GREEN_LED
RED_LED
BLUE_LED
HAPTICS_I2C_SCL
HAPTICS_I2C_SDA
LCD_VSP_EN
LCD_VSN_EN
2018-08-23 23:12:12
XIAO MI
Title
X5
Size
A2
Document Number
LCD
Rev
P0
Date:
Tuesday, October 28, 2014
Sheet
28
of
32

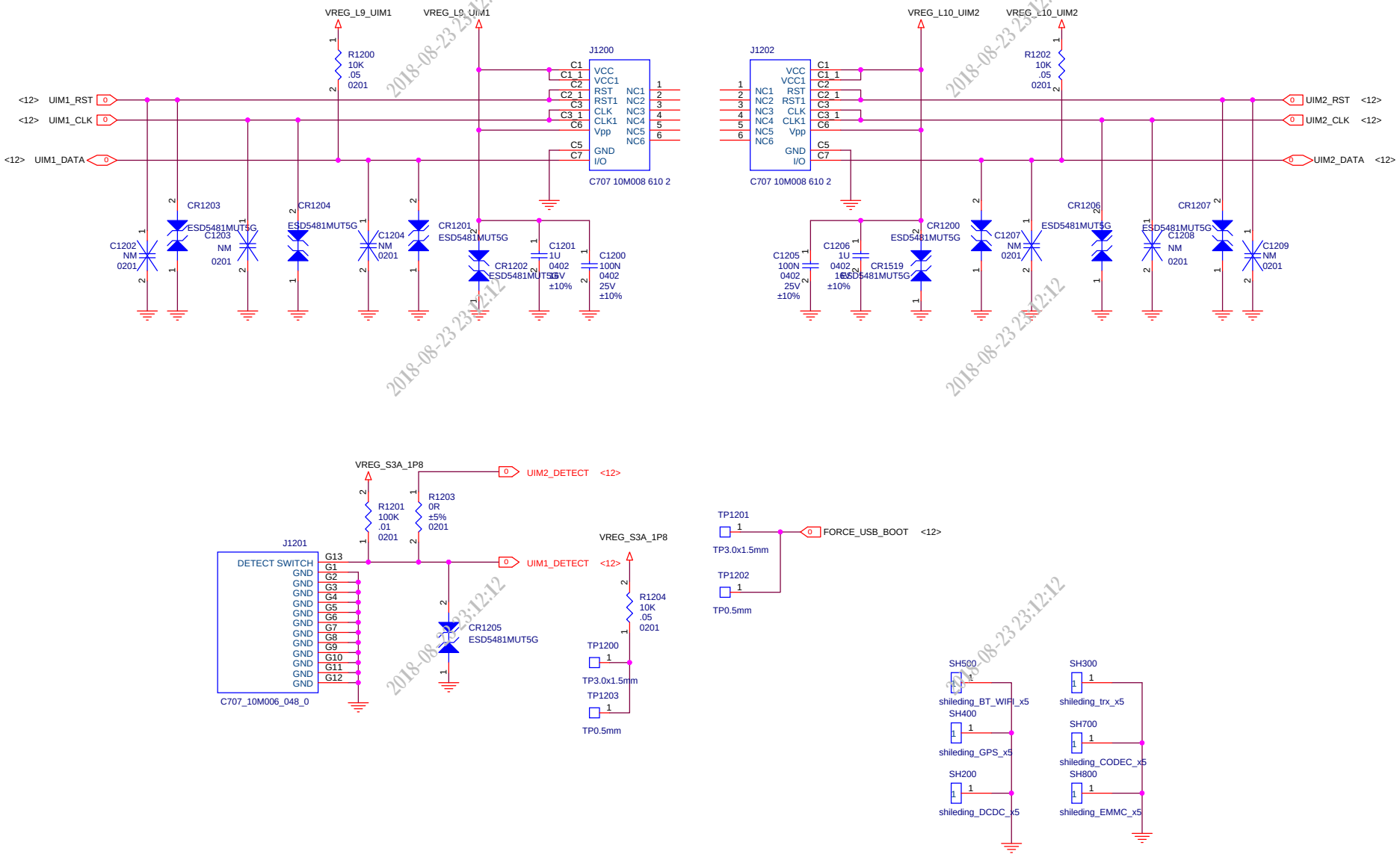

SD&SIM CONNECTOR

XIAO MI		
Title: X5		
Size: A3	Document Number: SD&SIM CONNECTOR	Rev: P0
Date: Tuesday, October 28, 2014	Sheet 29 of 32	

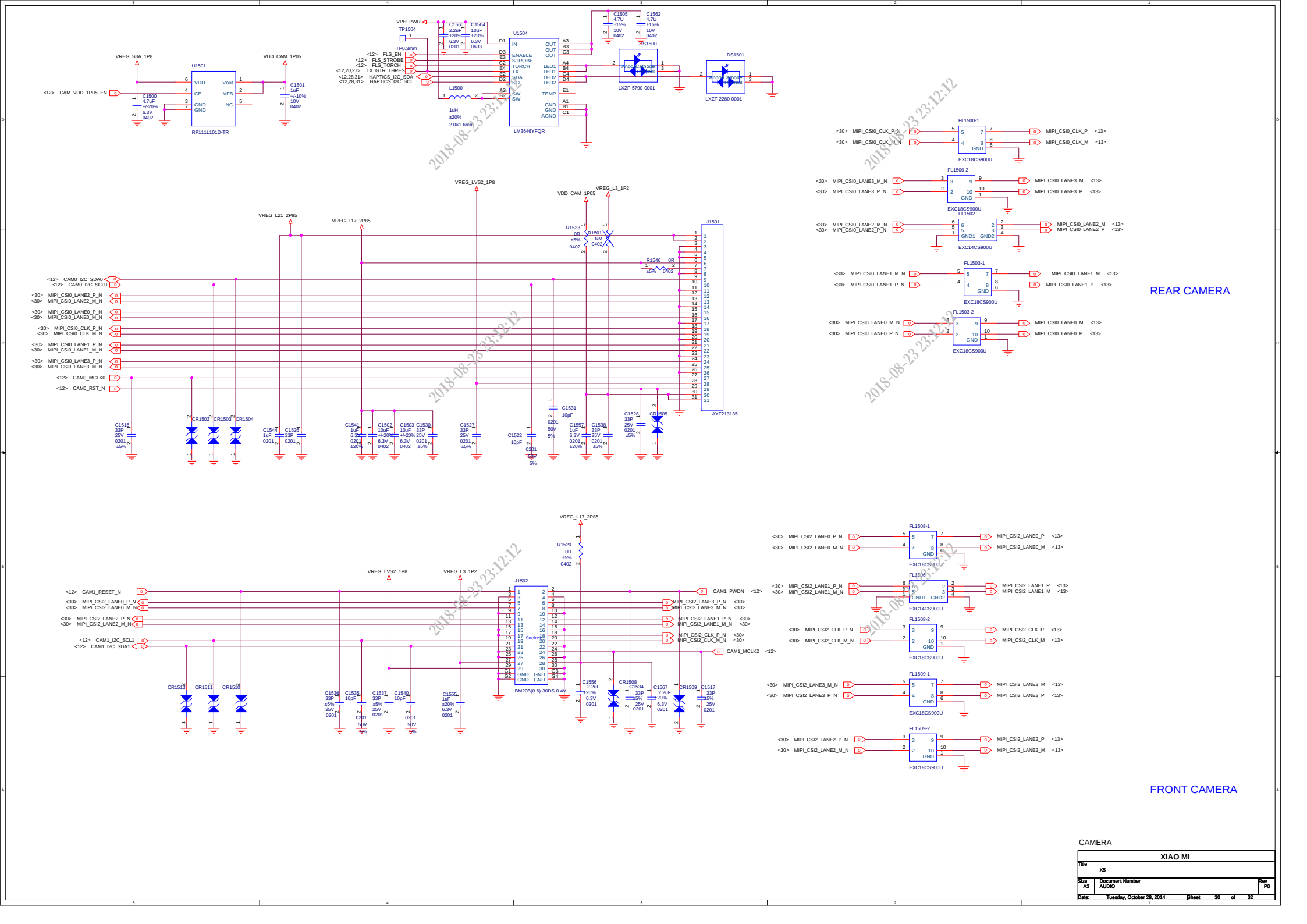
U1501
RP111L101D-TR
U1504
LM3646YFQR
LXZF-5790-0001
LXZF-2280-0001
J1501
AYF213135
J1502
BM20B(0.6)-30DS-0.4V
REAR CAMERA
FRONT CAMERA
CAMERA
XIAO MI
X5
Size A2
Document Number AUDIO
Rev P0
Date: Tuesday, October 28, 2014
Sheet 30 of 32

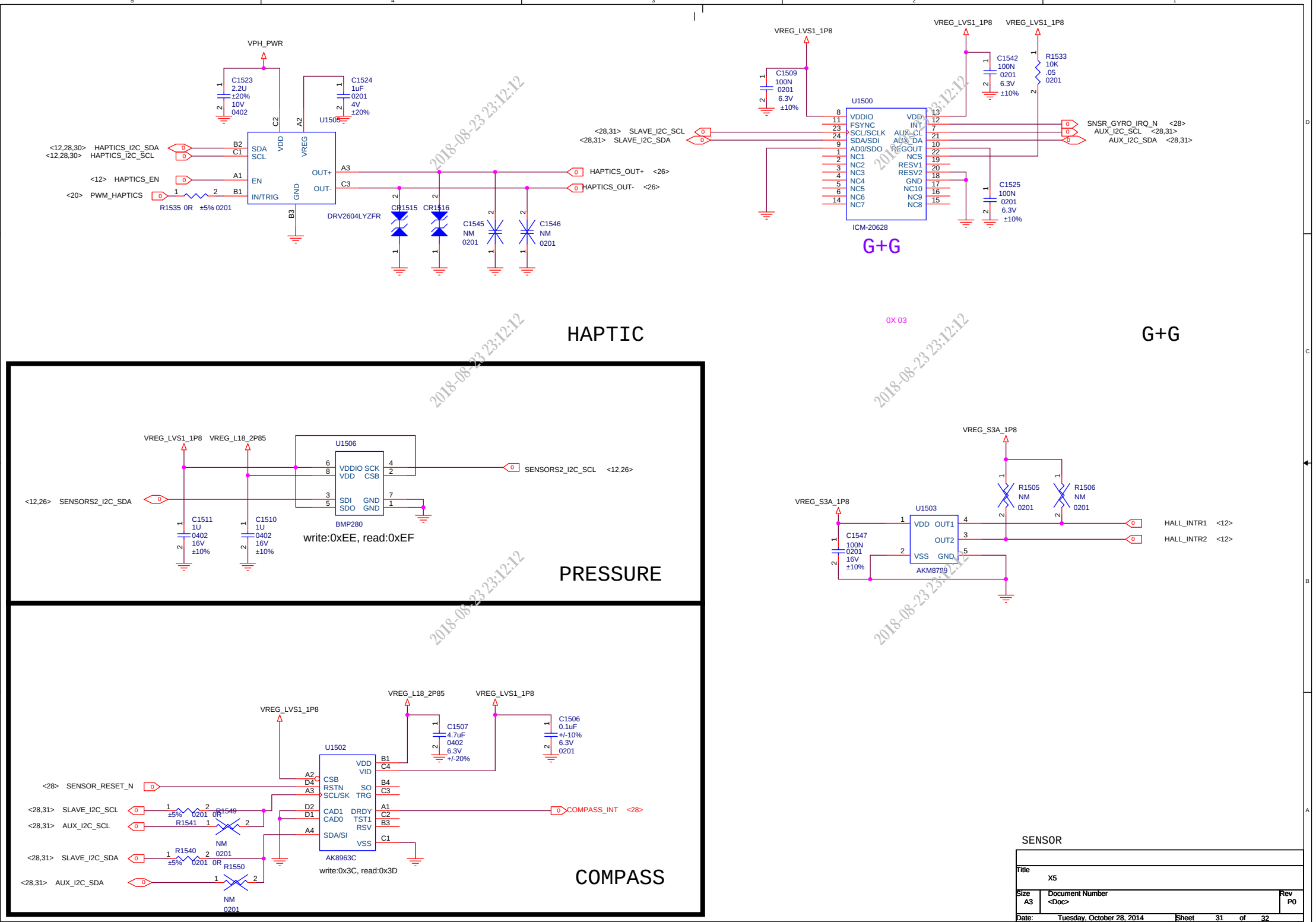

SENSOR

Title	X5	
Size A3	Document Number <Doc>	Rev P0
Date: Tuesday, October 28, 2014	Sheet 31 of 32	

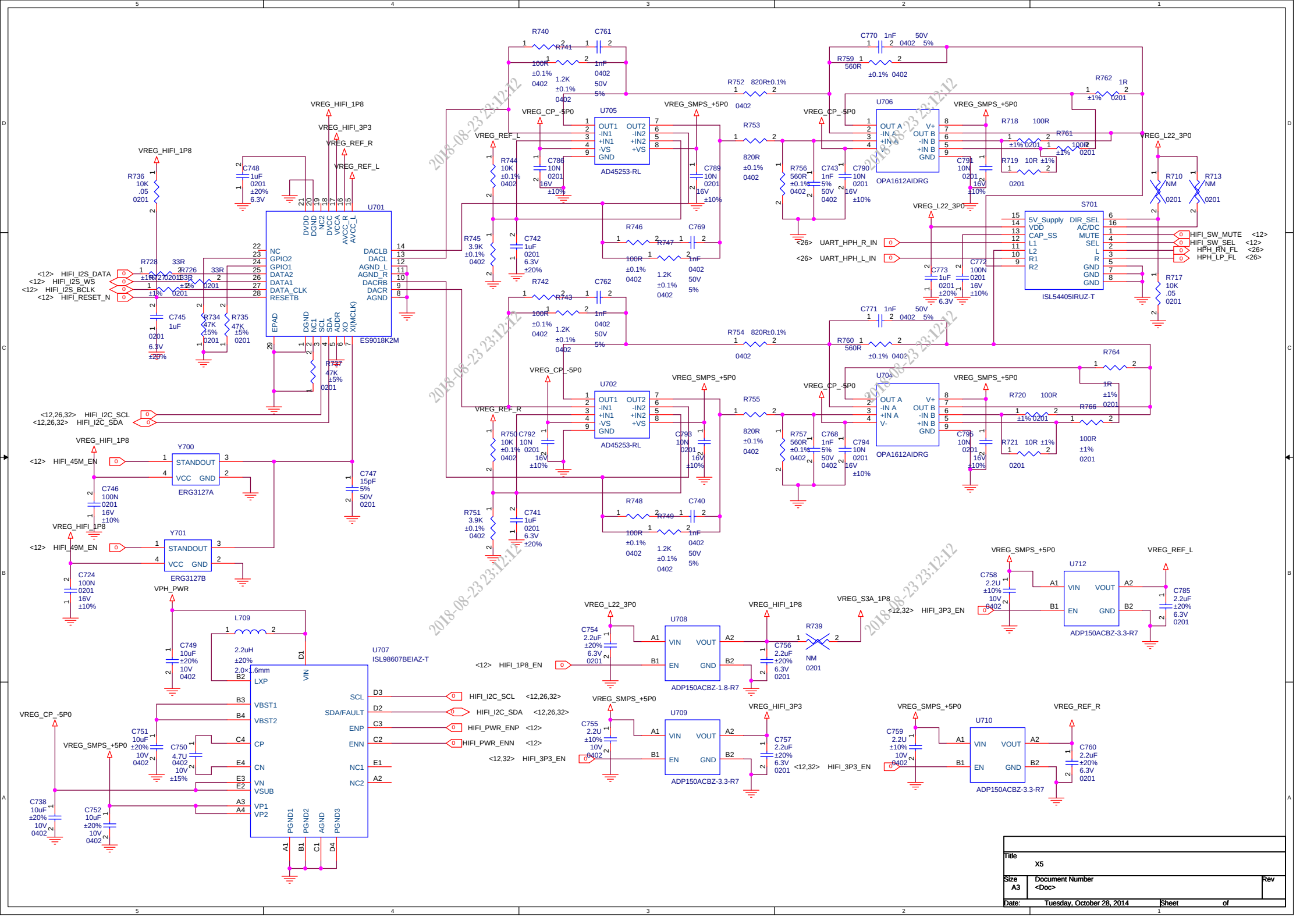

Title	X5
Size A3	Document Number <Doc>
Rev	
Date: Tuesday, October 28, 2014	Sheet of