Title	F10 MAIN
Size A2	Document Number CONTENT
Rev	P0
Date:	Wednesday, September 11, 2019
Sheet	01 of 71

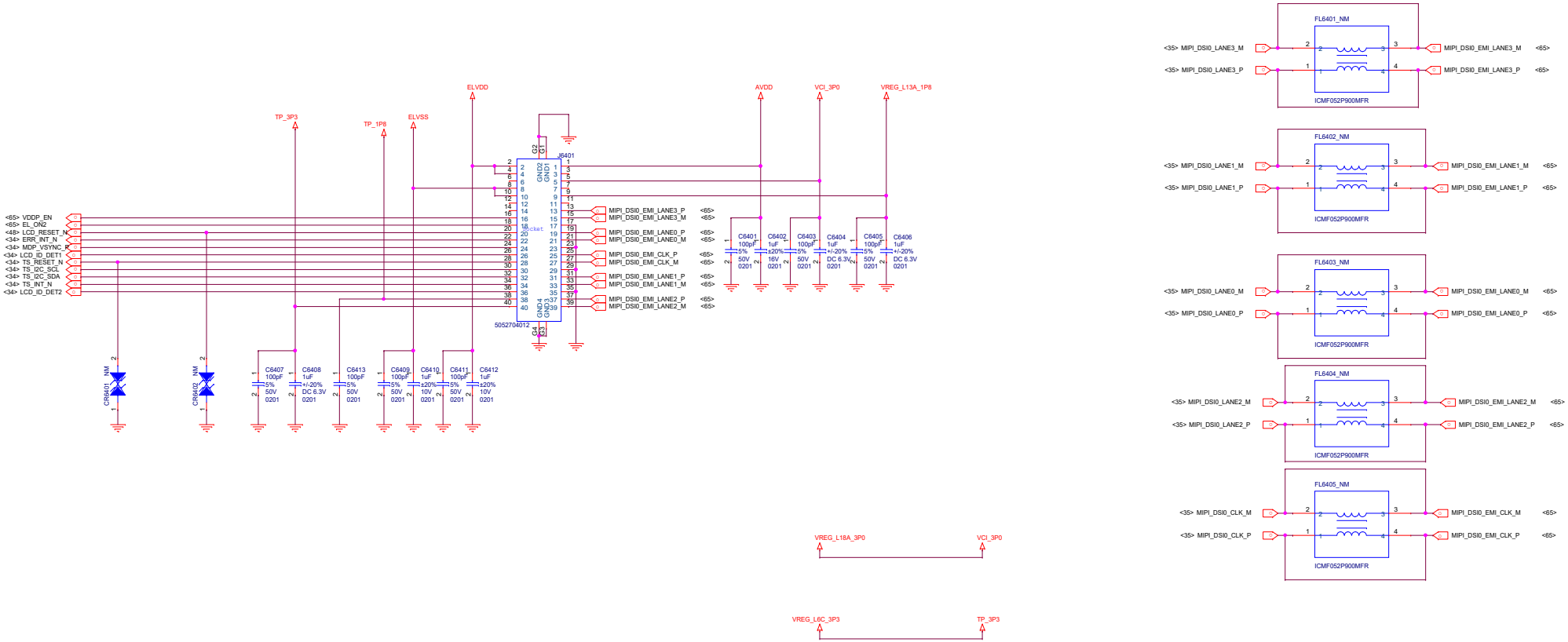

Title	F10 MAIN	
Size A2	Document Number AMOLED	Rev P0
Date: Wednesday, September 11, 2019	Sheet 1 of 1	

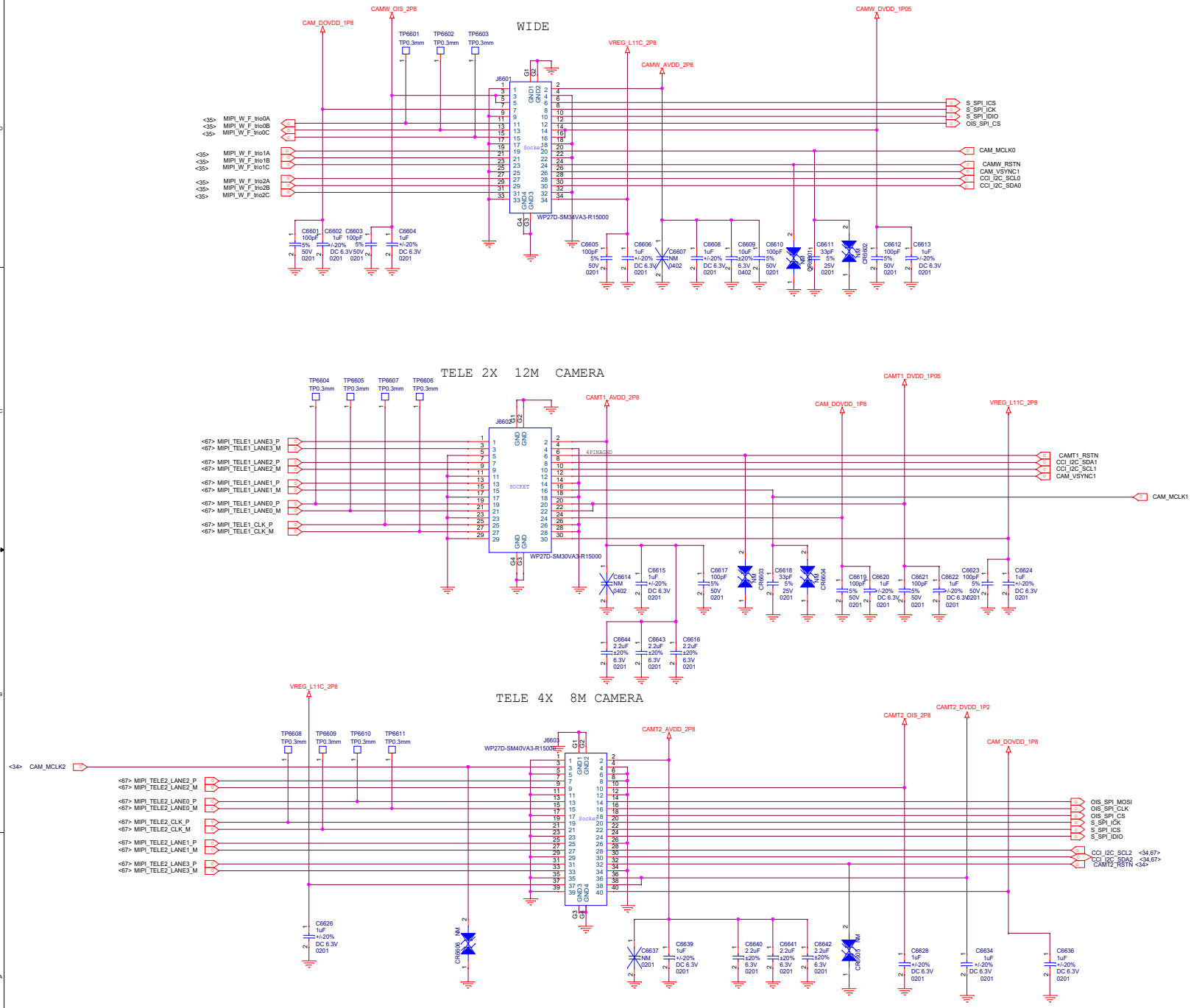

Wide
sensor: 0x7A/0x7B, Actuator: 0x18/0x19, EEPROM: 0xA0/0xA1, OIS Driver: 0x1C/0x1D
tele 2x
sensor: 0x20/0x21, Actuator: 0x1E/0x1F, EEPROM: 0xA2/0xA3
tele 4x
sensor: 0x6C/0x6D, Actuator: 0xE8/0xE9, EEPROM: 0xA8/0xA9, OIS Driver: 0x7C/0x7D

Title	F10 MAIN
Size A2	Document Number WIDE&TELE CAMERA
	P0
Date: Wednesday, September 11, 2019	Sheet 1 of 1

MICRO CAMERA

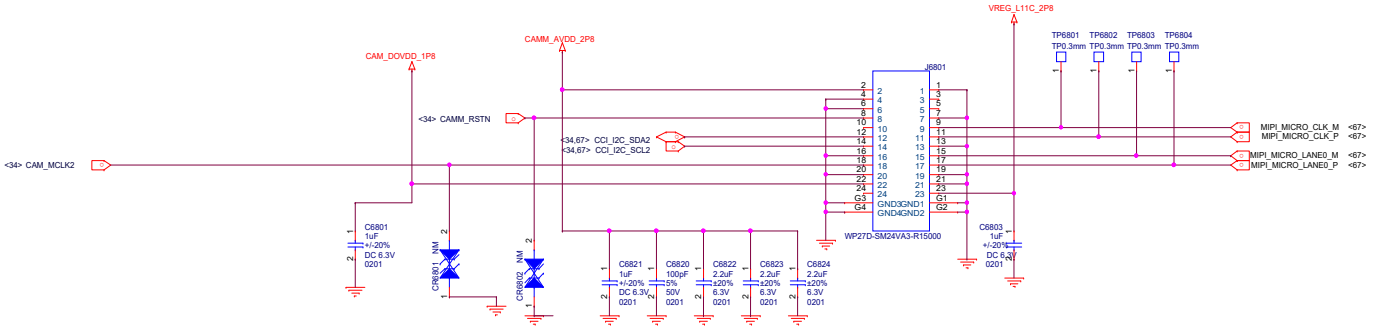

ULTRA 20M CAMERA

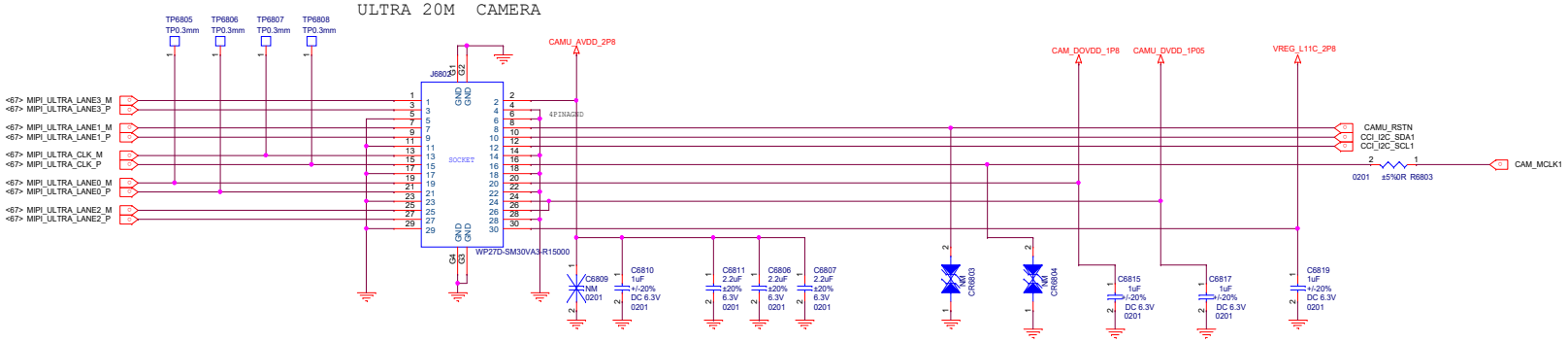

ultra
sensor: 0x34/0x35, Actuator: 0x18/0x19, EEPROM: 0xA0/0xA1
micro
sensor: 0x7A/0x7B, Actuator: 0x1C/0x1D, EEPROM: 0xA2/0xA3

Title	F10 MAIN	
Size A2	Document Number ULTRA CAMERA	
Date: Wednesday, September 11, 2019	Sheet 1 of 1	

WIDE

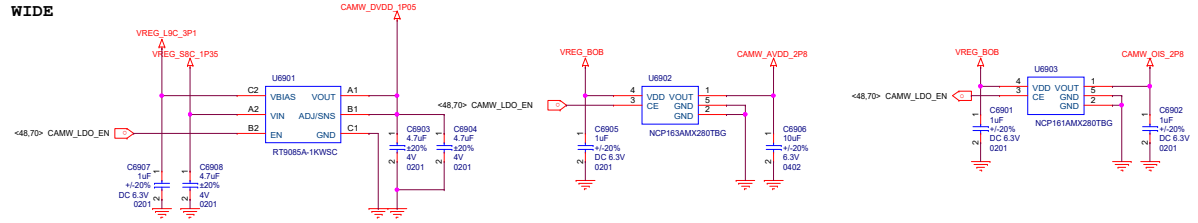

TELE 2X

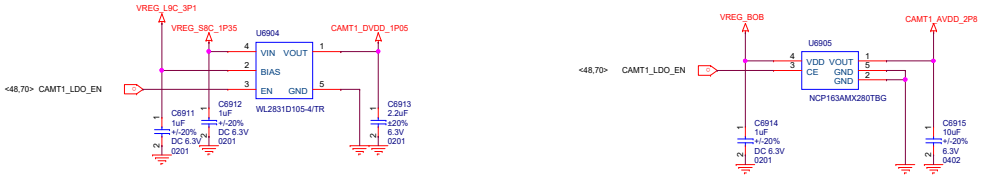

TELE 4X

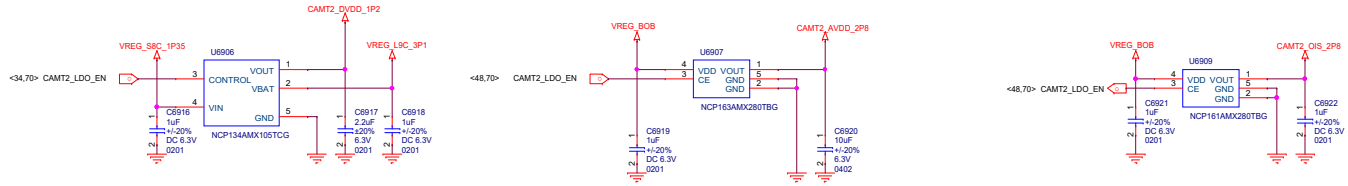

FRONT

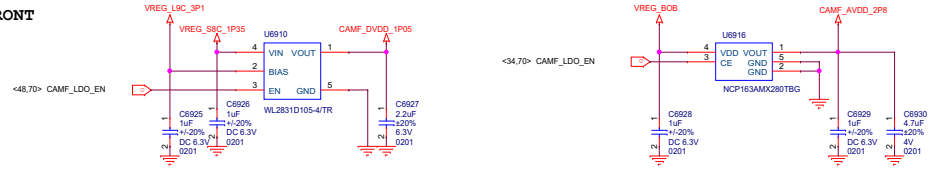

ULTRA

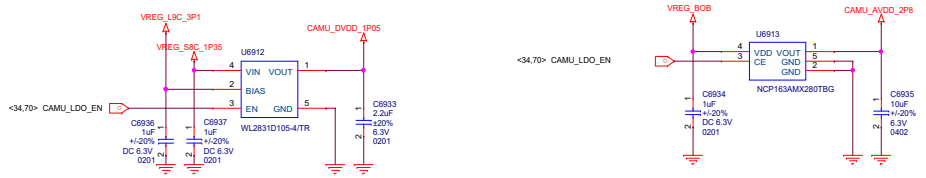

MICRO

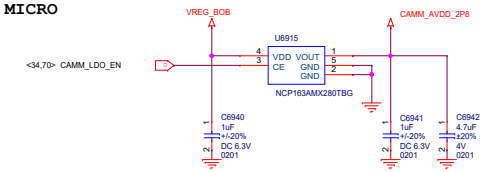

CAM IO

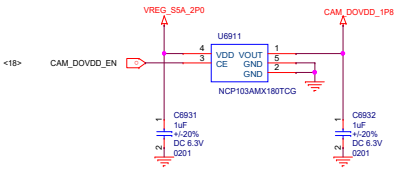

Title	F10 MAIN	
Size A2	Document Number CAMERA LDOs	
Date: Wednesday, September 11, 2019	Sheet 1 of 1	

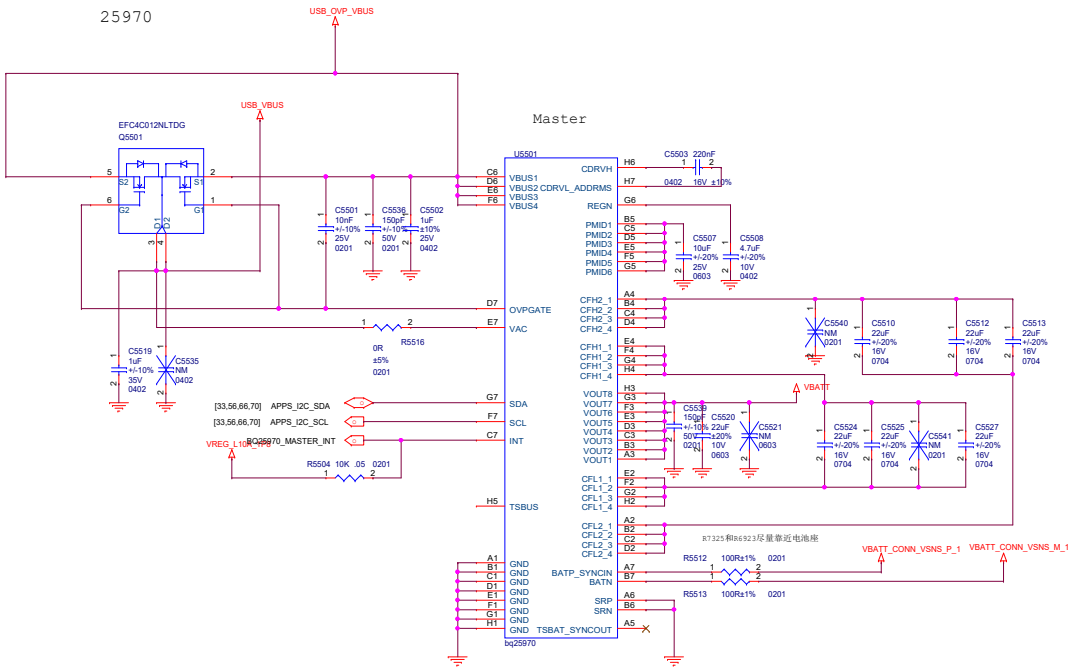

Title	F1 MAIN
Size A2	Document Number SMB13908WL POWER
	P0
Date: Wednesday, September 11, 2019	Sheet 1 of 1

Switch

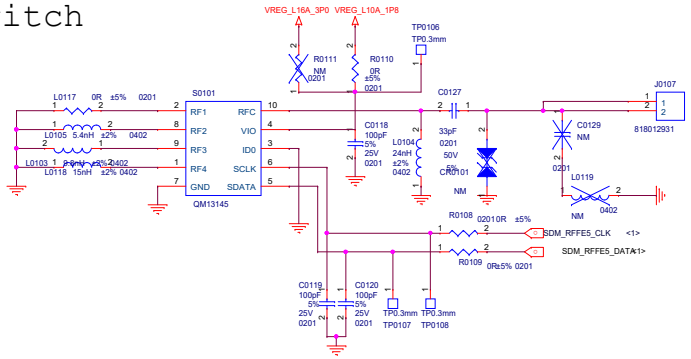

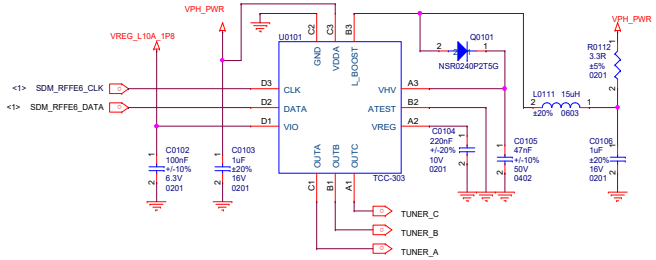

PTIC

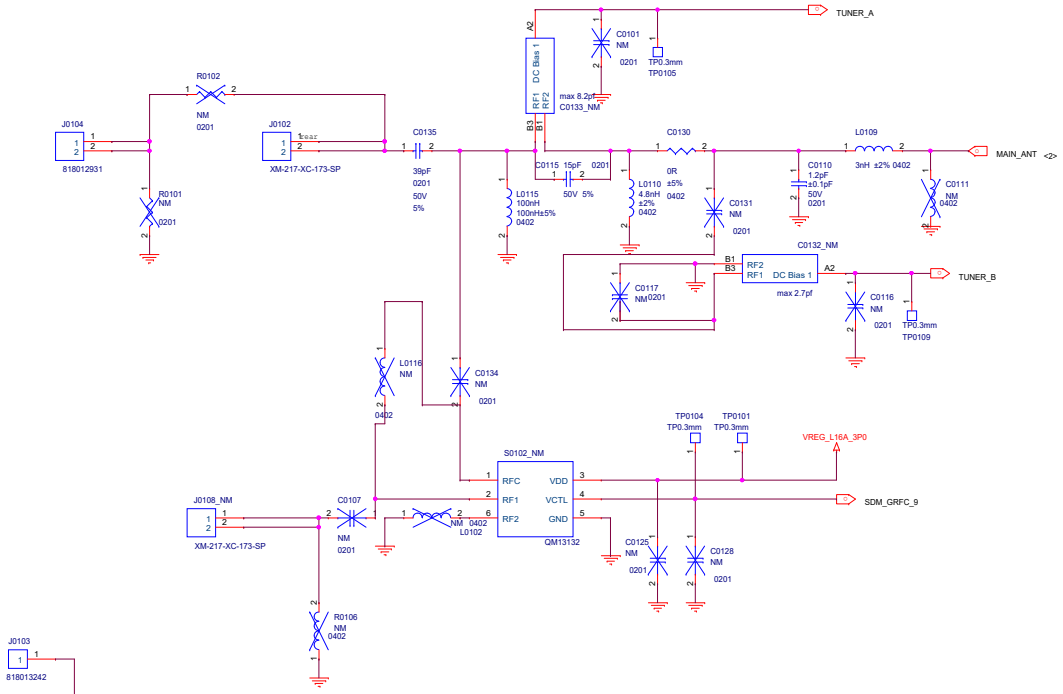

Combo ANT

SAR Sensor

Title	F10 MAIN		
Size A2	Document Number <Doc>		P0
Date: Wednesday, September 11, 2019	Sheet 02 of 71		

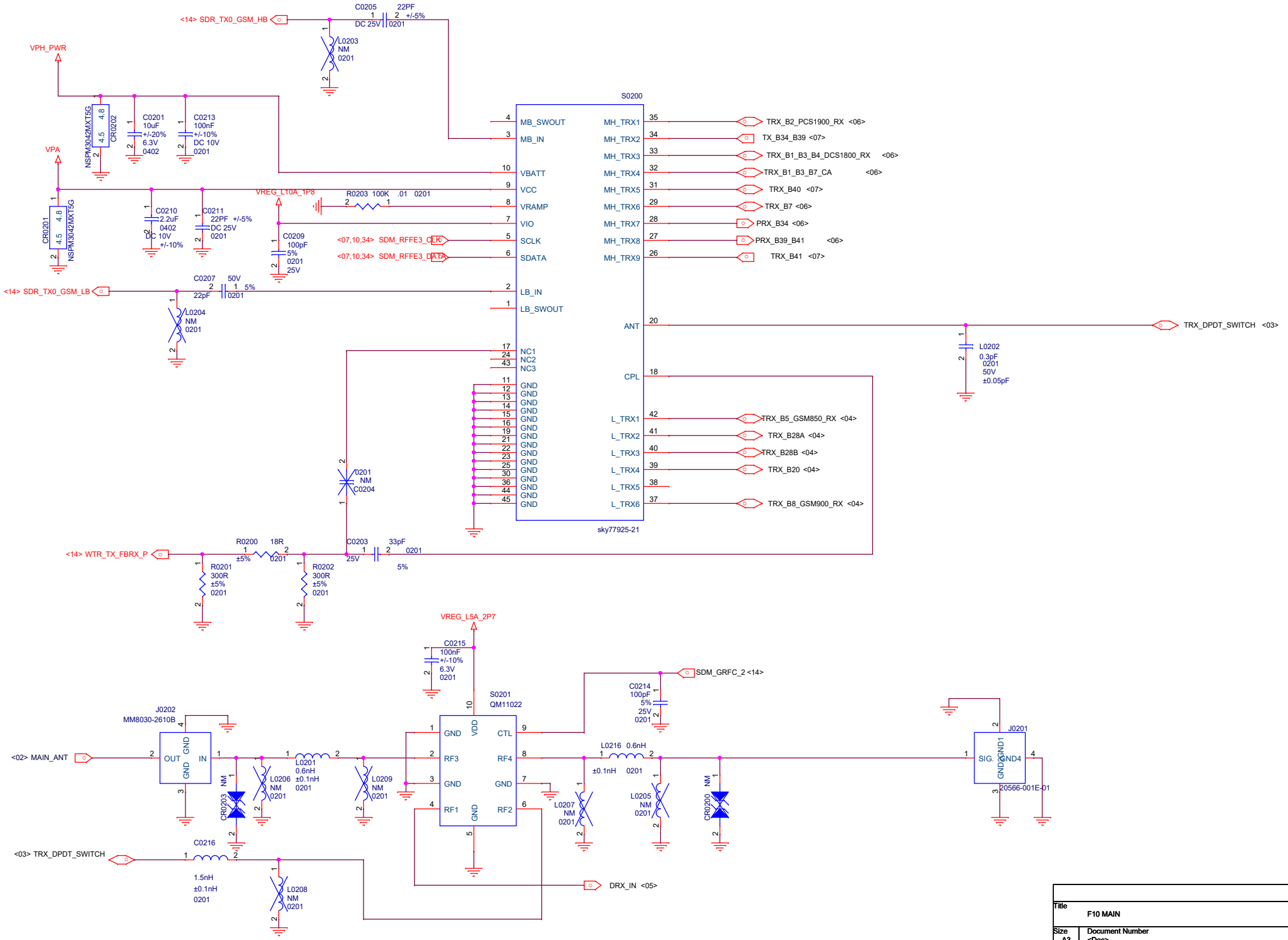

Title	F10 MAIN	
Size A3	Document Number <Doc>	P0
Date: Wednesday, September 11, 2019	Sheet 03 of 71	

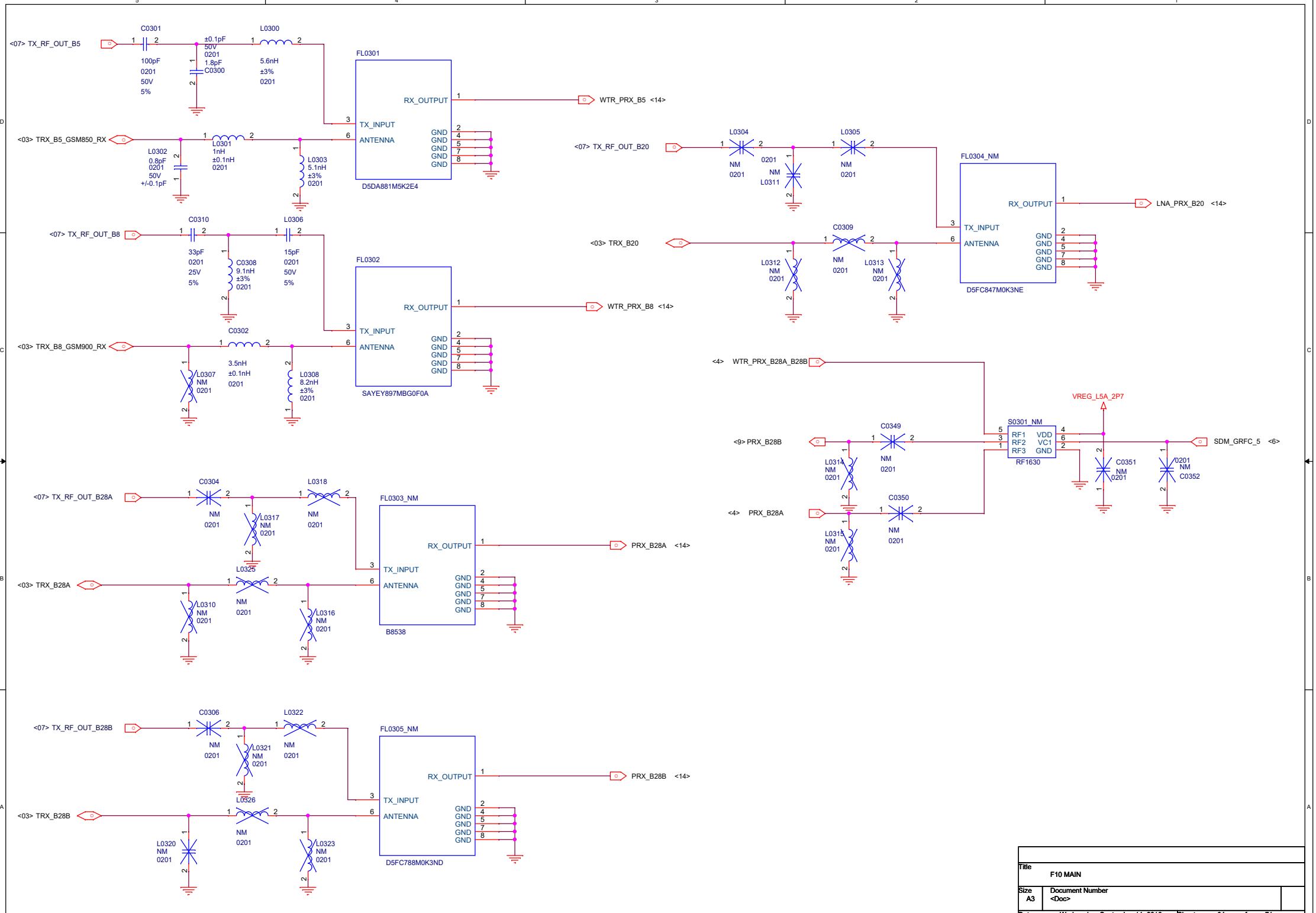

Title	F10 MAIN
Size A3	Document Number <Doc>
Date: Wednesday, September 11, 2019	Sheet 04 of 71

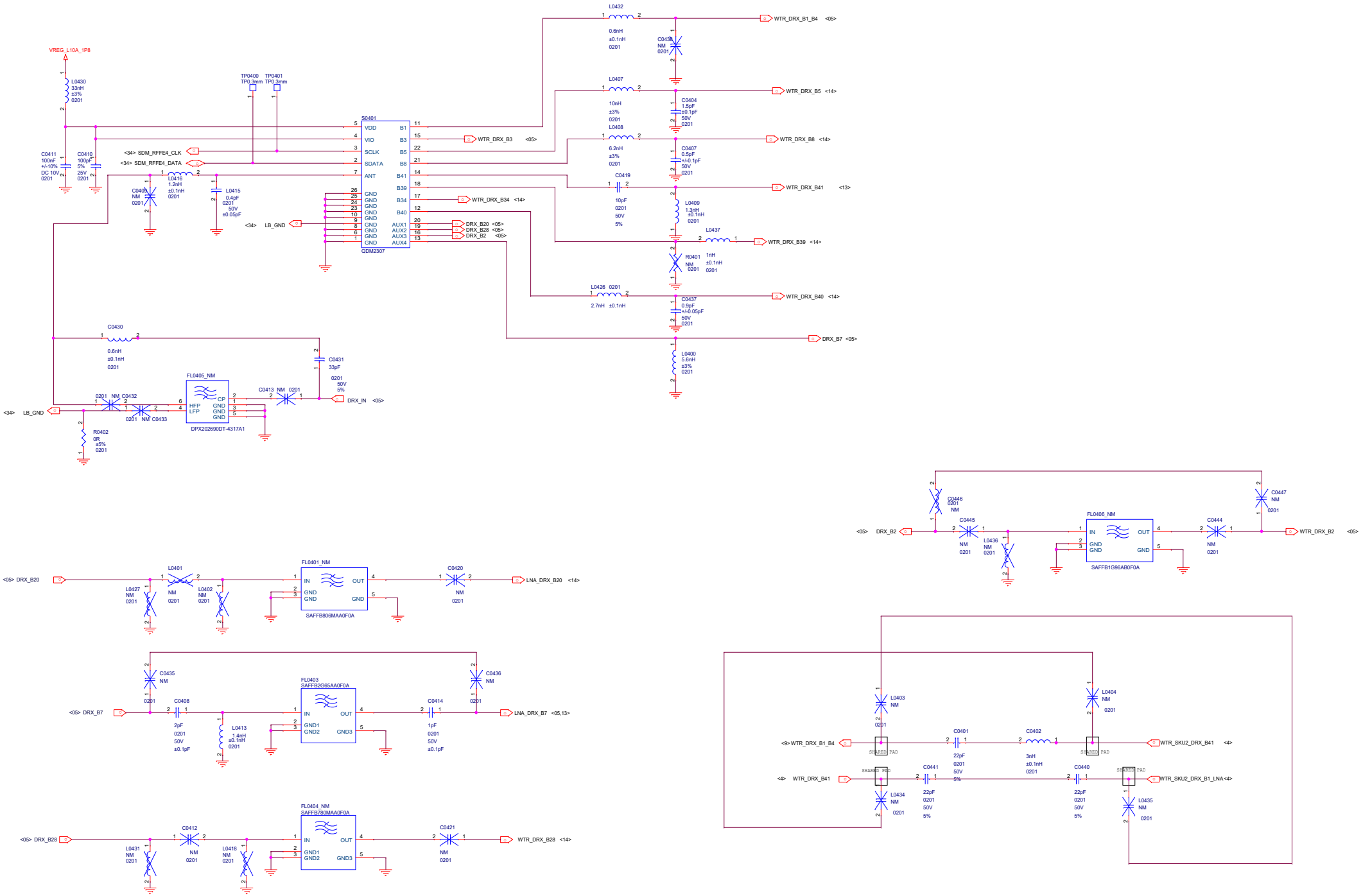

Title	F10 MAIN
Size A2	Document Number <Doc>
Date: Wednesday, September 11, 2019	Sheet 05 of 71

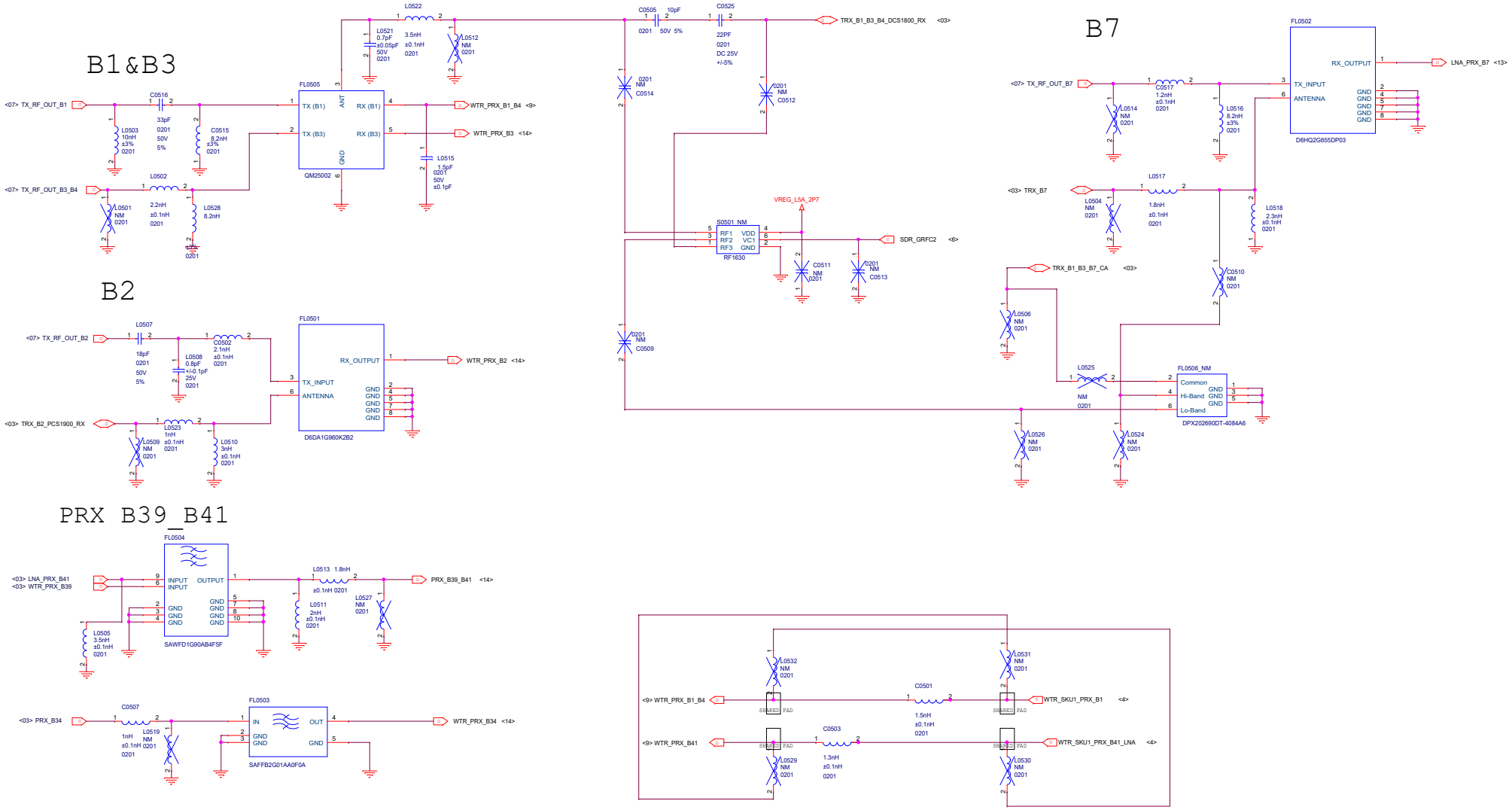

Title	F10 MAIN
Size A2	Document Number <Doc>
Date: Wednesday, September 11, 2019	Sheet 06 of 71

MMMB PA

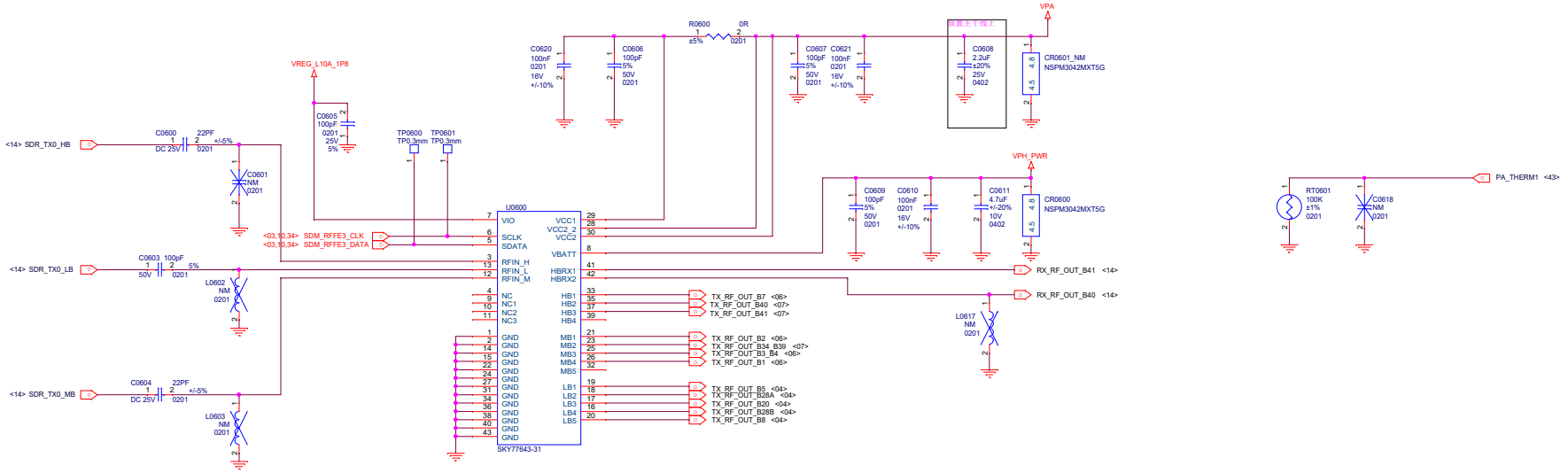

TX B34_B39

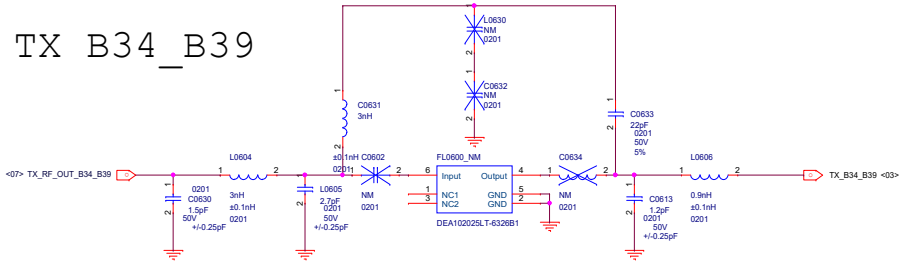

TRX_B41

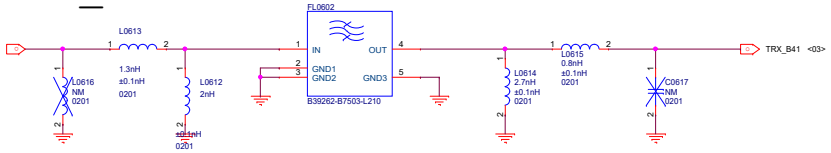

TRX_B40

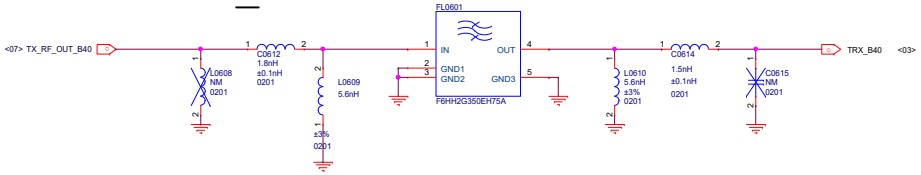

Title	F10 MAIN
Size A2	Document Number PA1
Date: Wednesday, September 11, 2019	Sheet 07 of 71

Title	F10 MAIN
Size A3	Document Number PA2
Date: Wednesday, September 11, 2019	Sheet 08 of 71

Title	F10 MAIN
Size A3	Document Number Reserved(for PA)
Date: Wednesday, September 11, 2019	Sheet 09 of 71

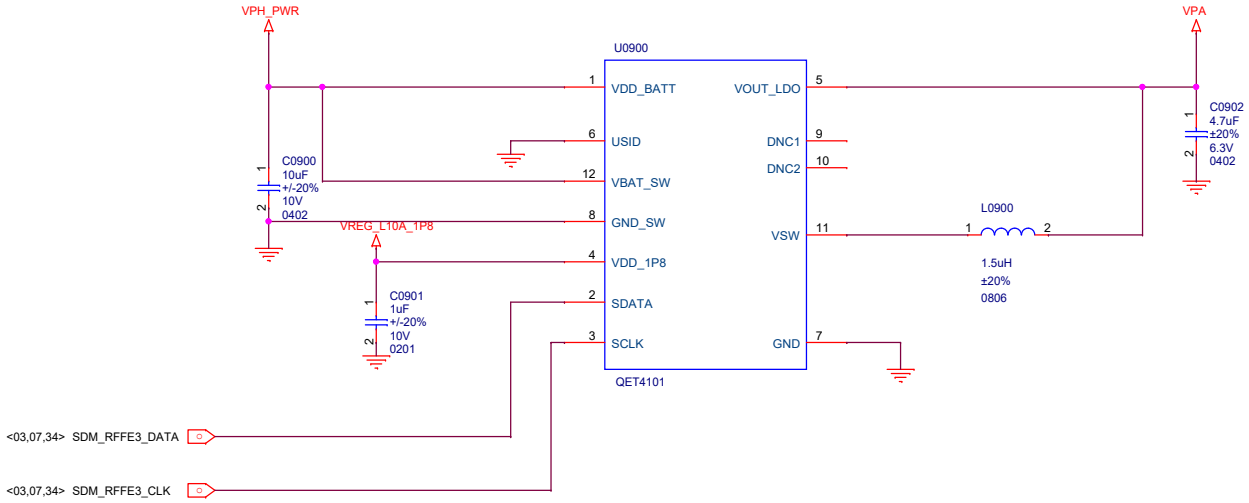

Title	F10 MAIN
Size A3	Document Number RF DC-DC
Date: Wednesday, September 11, 2019	Sheet 10 of 70

Title	F10 MAIN
Size A3	Document Number QLN PRX
Date: Wednesday, September 11, 2019	Sheet 11 of 71

Title	F10 MAIN
Size A3	Document Number QLN DRX
Date: Wednesday, September 11, 2019	Sheet 12 of 71

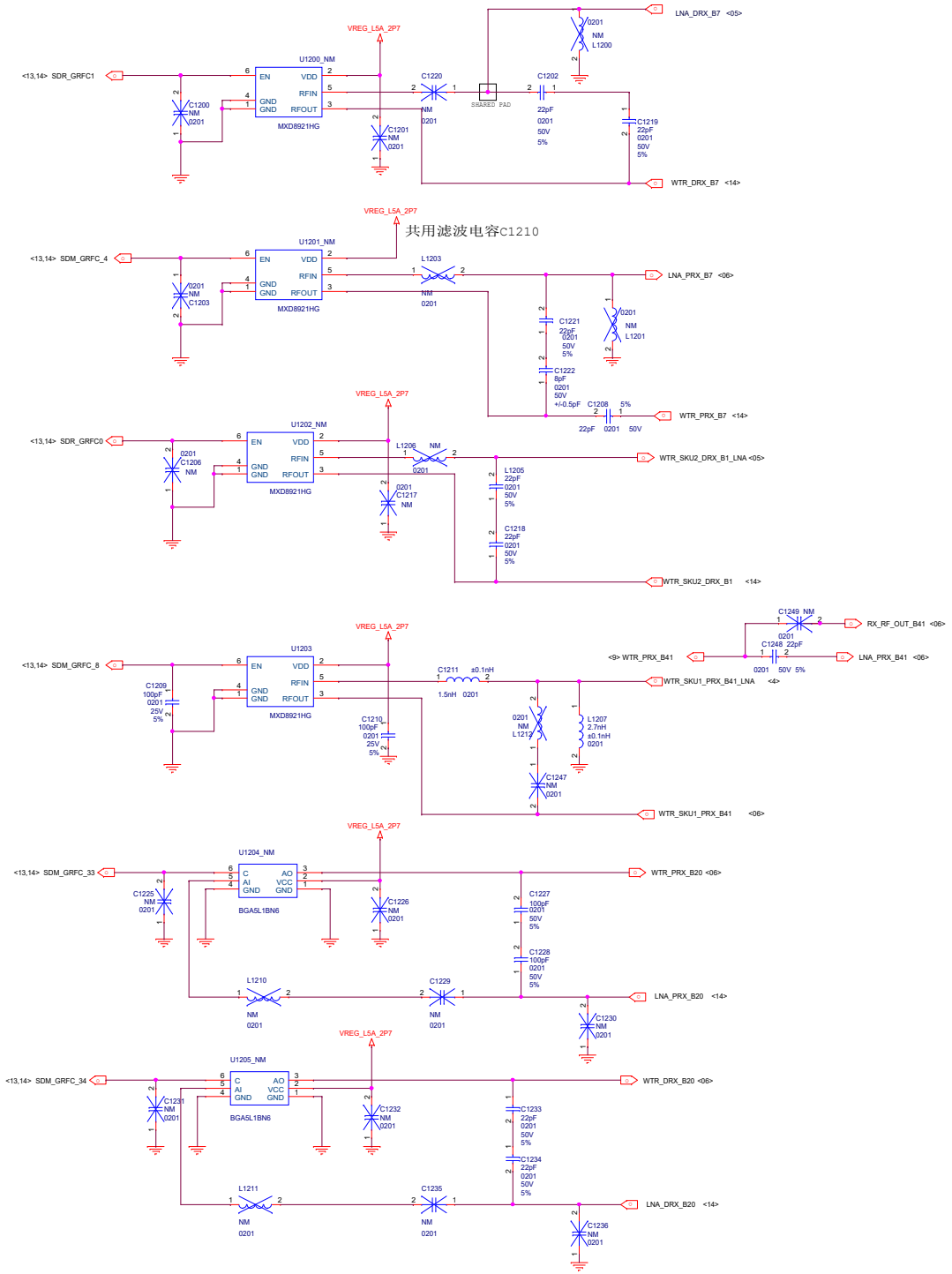

Title	F10 MAIN
Size A2	Document Number Reserved(for LNA)
Date: Wednesday, September 11, 2019	Sheet 13 70

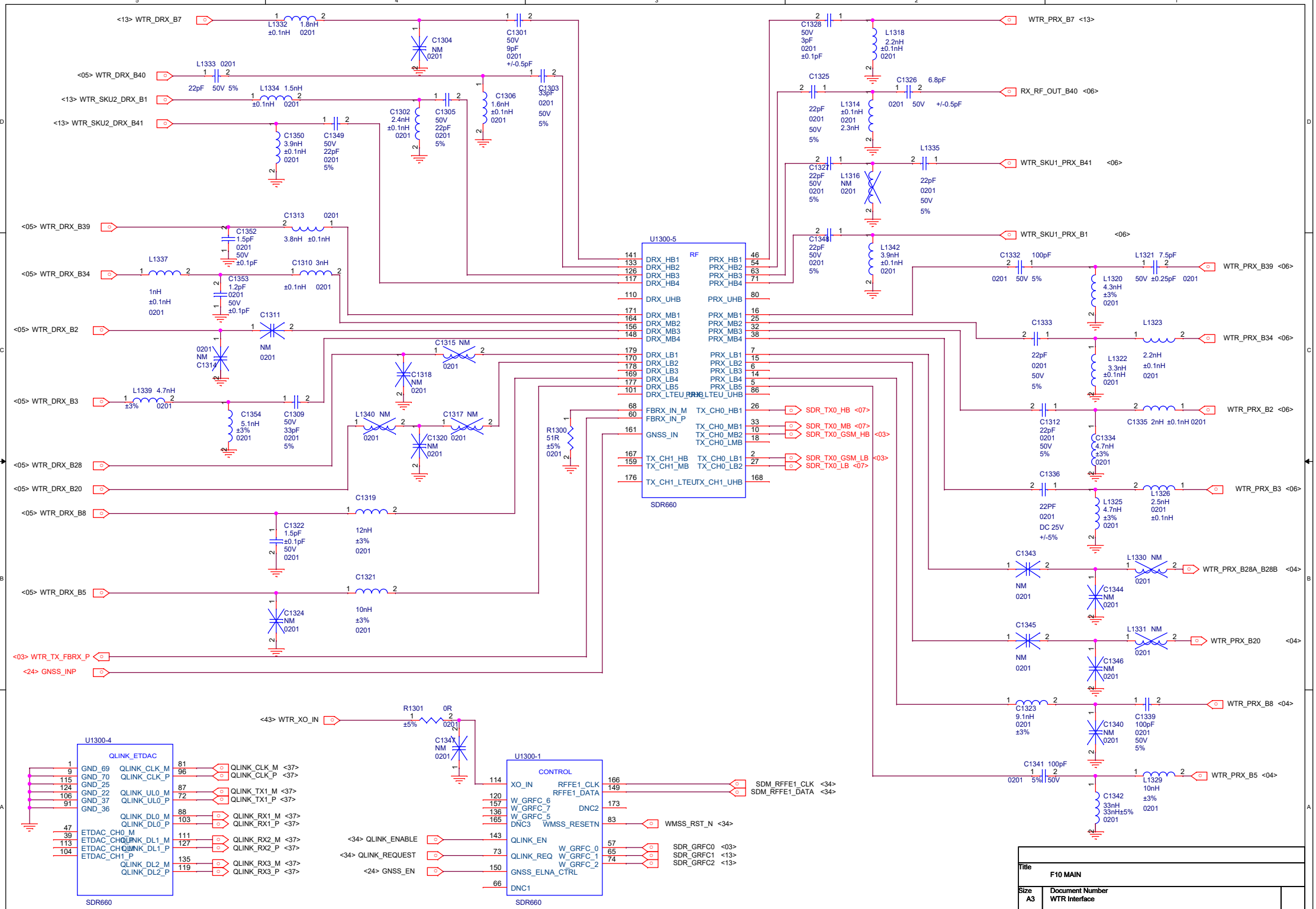
U1300-5
RF
SDR660
U1300-4
QLINK_ETDAC
SDR660
U1300-1
CONTROL
SDR660
<13> WTR_DRX_B7
<05> WTR_DRX_B40
<13> WTR_SKU2_DRX_B1
<13> WTR_SKU2_DRX_B41
<05> WTR_DRX_B39
<05> WTR_DRX_B34
<05> WTR_DRX_B2
<05> WTR_DRX_B3
<05> WTR_DRX_B28
<05> WTR_DRX_B20
<05> WTR_DRX_B8
<05> WTR_DRX_B5
<03> WTR_TX_FBRX_P
<24> GNSS_INP
<43> WTR_XO_IN
WTR_PRX_B7 <13>
RX_RF_OUT_B40 <06>
WTR_SKU1_PRX_B41 <06>
WTR_SKU1_PRX_B1 <06>
WTR_PRX_B39 <06>
WTR_PRX_B34 <06>
WTR_PRX_B2 <06>
WTR_PRX_B3 <06>
WTR_PRX_B28A_B28B <04>
WTR_PRX_B20 <04>
WTR_PRX_B8 <04>
WTR_PRX_B5 <04>
SDR_TX0_HB <07>
SDR_TX0_MB <07>
SDR_TX0_GSM_HB <03>
SDR_TX0_GSM_LB <03>
SDR_TX0_LB <07>
SDM_RFFE1_CLK <34>
SDM_RFFE1_DATA <34>
WMSS_RST_N <34>
SDR_GRFC0 <03>
SDR_GRFC1 <13>
SDR_GRFC2 <13>
<34> QLINK_ENABLE
<34> QLINK_REQUEST
<24> GNSS_EN
QLINK_CLK_M <37>
QLINK_CLK_P <37>
QLINK_TX1_M <37>
QLINK_TX1_P <37>
QLINK_RX1_M <37>
QLINK_RX1_P <37>
QLINK_RX2_M <37>
QLINK_RX2_P <37>
QLINK_RX3_M <37>
QLINK_RX3_P <37>
Title
F10 MAIN
Size
A3
Document Number
WTR Interface
Date: Wednesday, September 11, 2019
Sheet 14 of 70

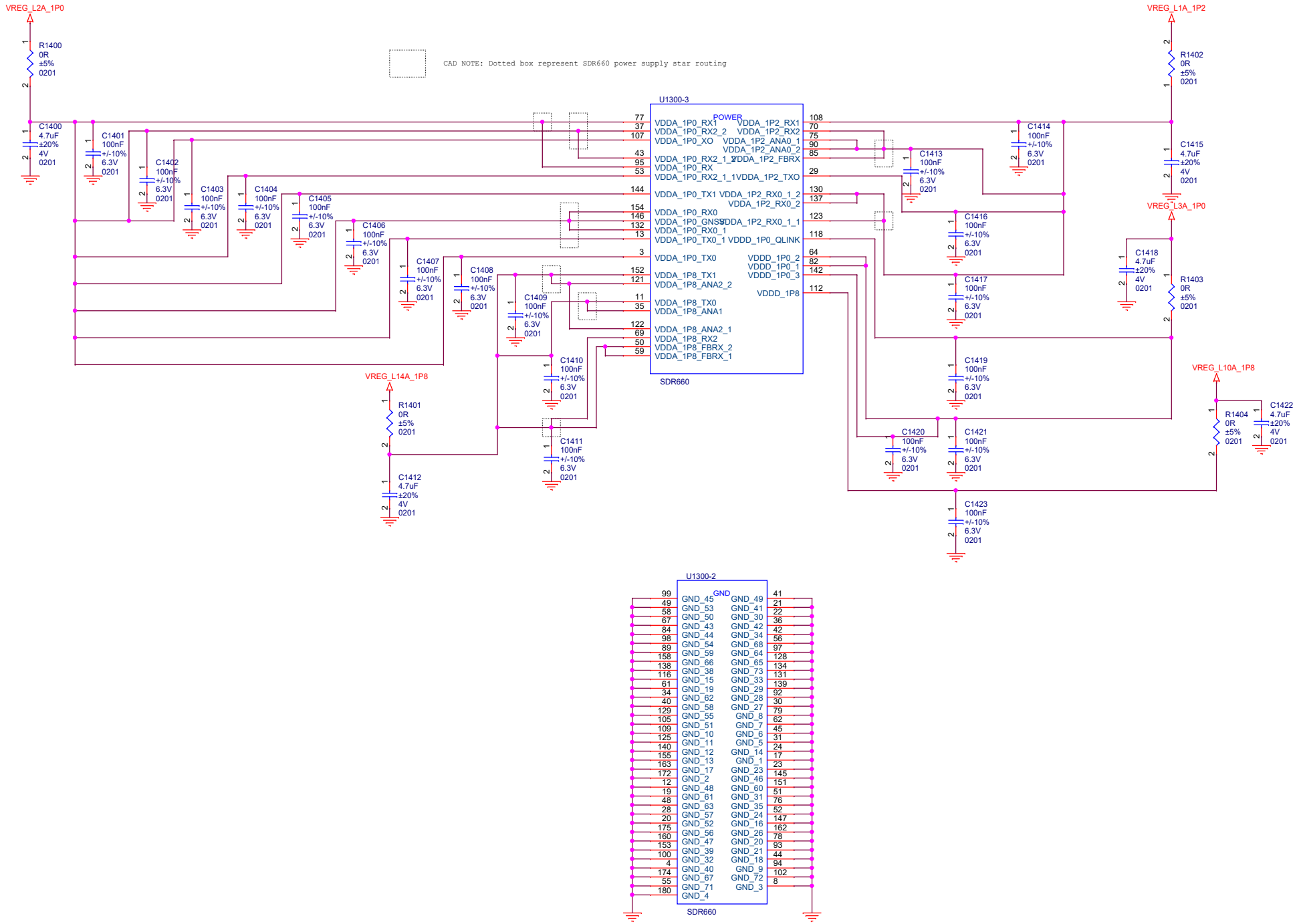

Title	F10 MAIN
Size A3	Document Number WTR PWR
Date: Wednesday, September 11, 2019	Sheet 15 70

Title	F10 MAIN
Size A3	Document Number Reserved(for WTR)
Date: Wednesday, September 11, 2019	Sheet 16 of 71

Title	F10 MAIN
Size A3	Document Number Reserved(for 5G-sub 6G)
Date: Wednesday, September 11, 2019	Sheet 17 of 71

Title	F10 MAIN
Size A3	Document Number Reserved(for MM Wave)
Date: Wednesday, September 11, 2019	Sheet 18 of 71

Title	F10 MAIN
Size A3	Document Number Reserved(for 5G-WTR I)
Date: Wednesday, September 11, 2019	Sheet 19 of 71

Title	F10 MAIN
Size A3	Document Number Reserved(for 5G-WTR P)
Date: Wednesday, September 11, 2019	Sheet 20 of 71

Title	F10 MAIN
Size A3	Document Number Reserved(for 5G-DC/DC)
Date: Wednesday, September 11, 2019	Sheet 21 of 71

Title	F10 MAIN
Size A3	Document Number NFC
Date: Wednesday, September 11, 2019	Sheet 22 of 71

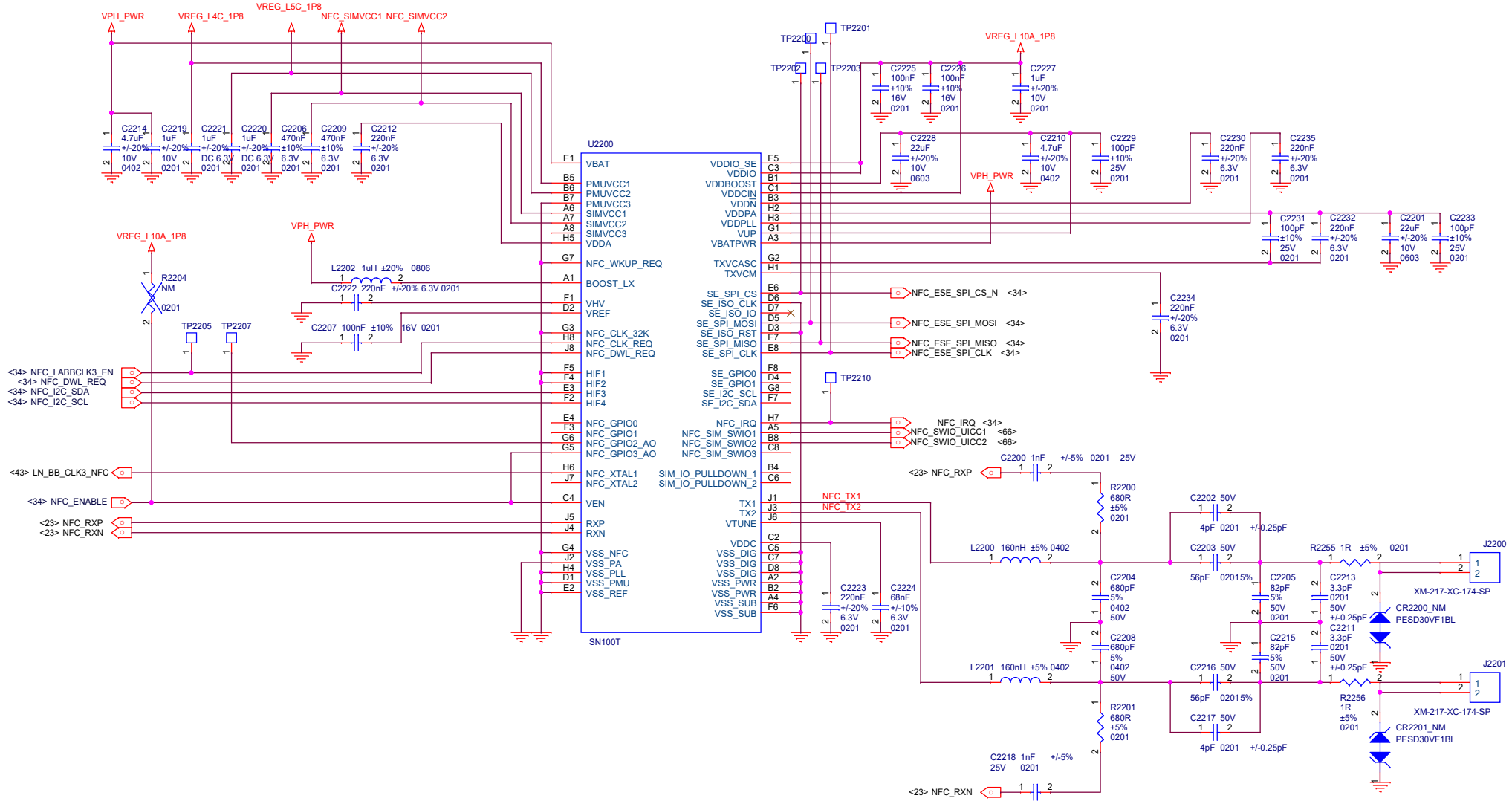

Title	F1 MAIN
Size A3	Document Number Reserved(for PA)
Date: Wednesday, September 11, 2019	Sheet 23 of 71

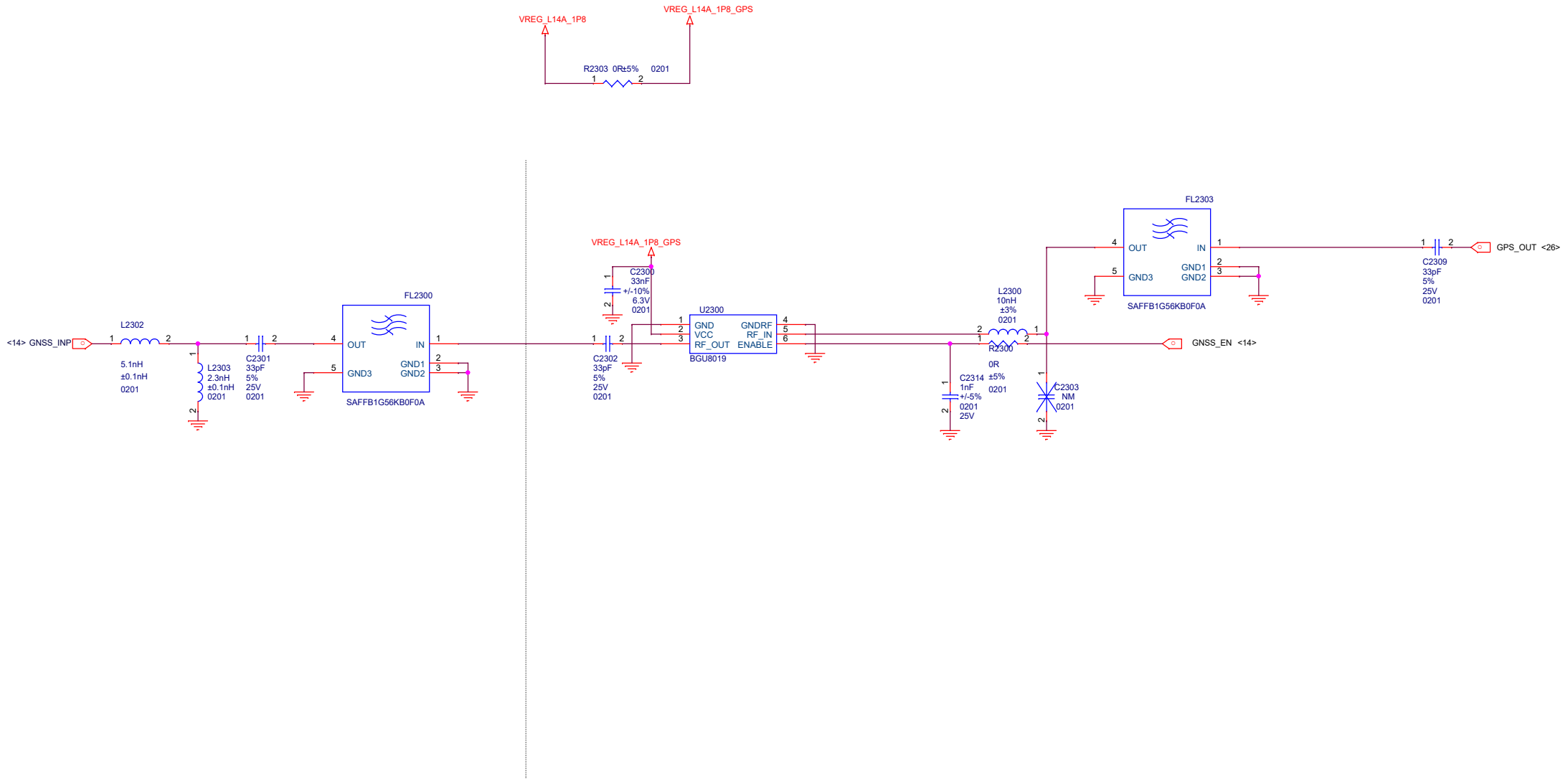

Title	F10 MAIN	
Size A3	Document Number GPS	Rev P0
Date: Wednesday, September 11, 2019	Sheet 24 of 71	

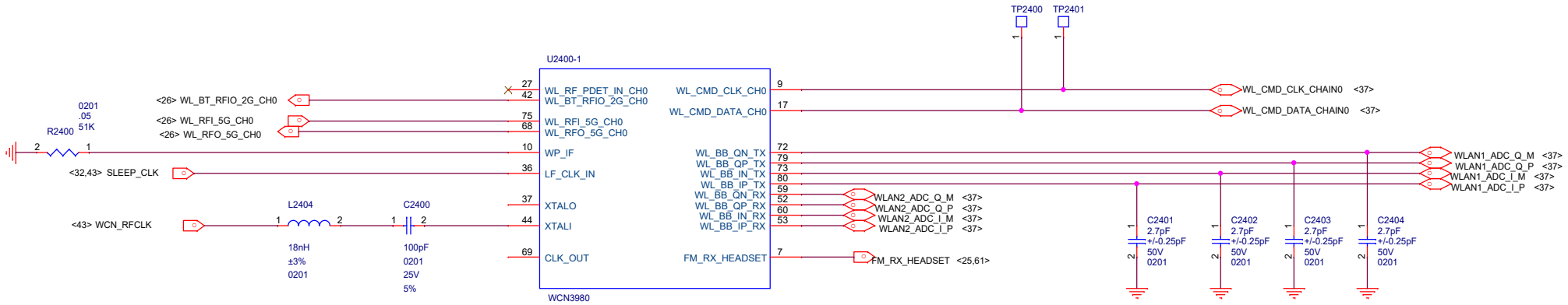

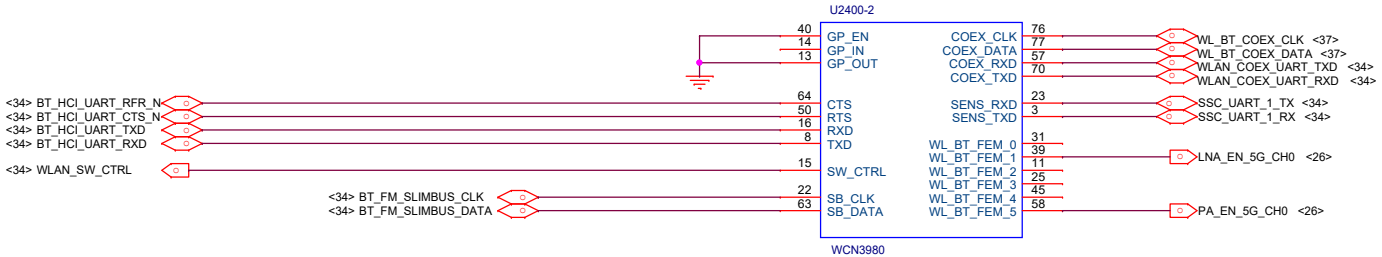

Title	F10 MAIN	
Size A3	Document Number WIFI Interface	
Date: Wednesday, September 11, 2019	Sheet 25 of 71	

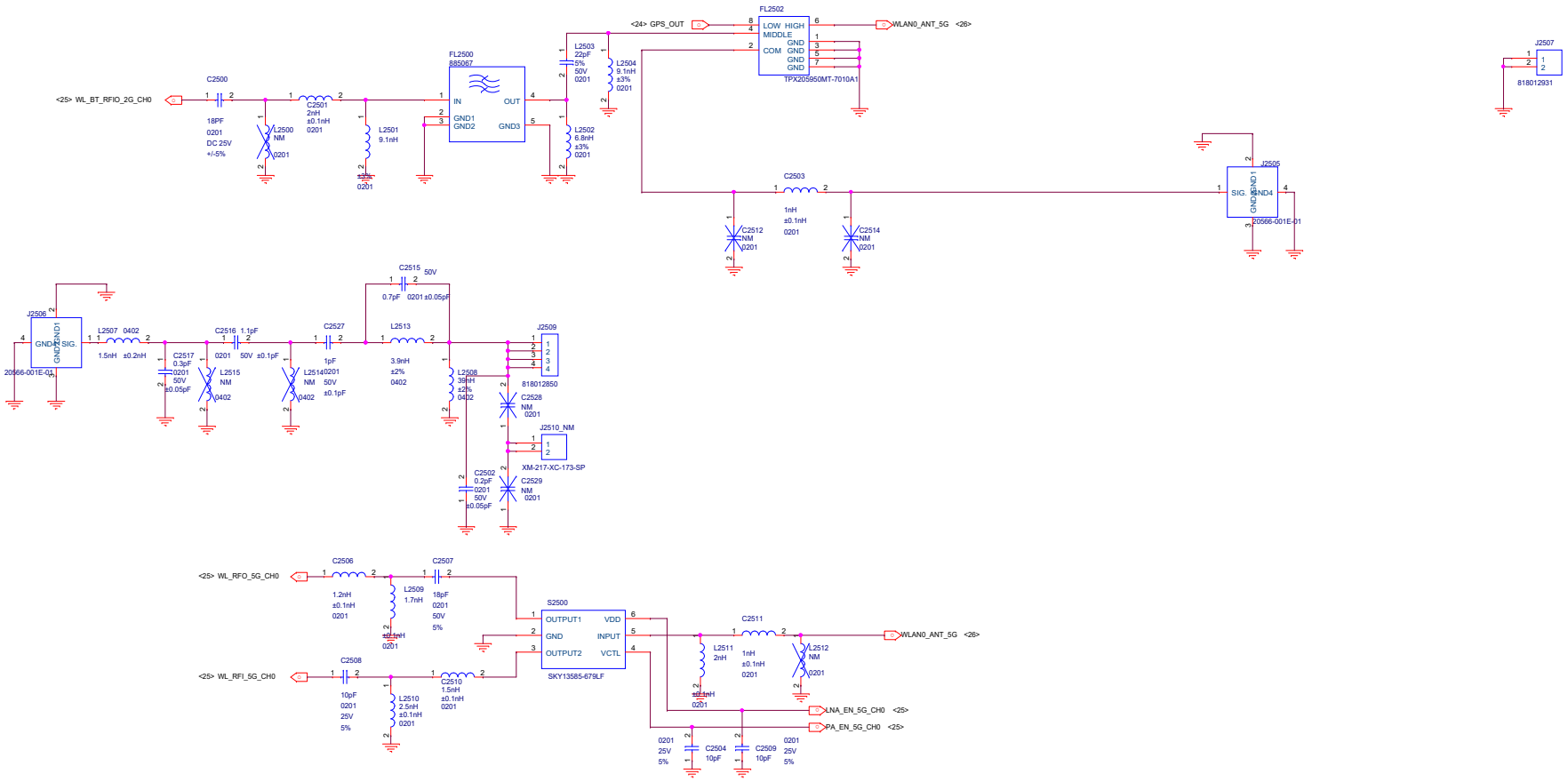

Title	F10 MAIN
Size A2	Document Number WIFI FEM
Date: Wednesday, September 11, 2019	Sheet

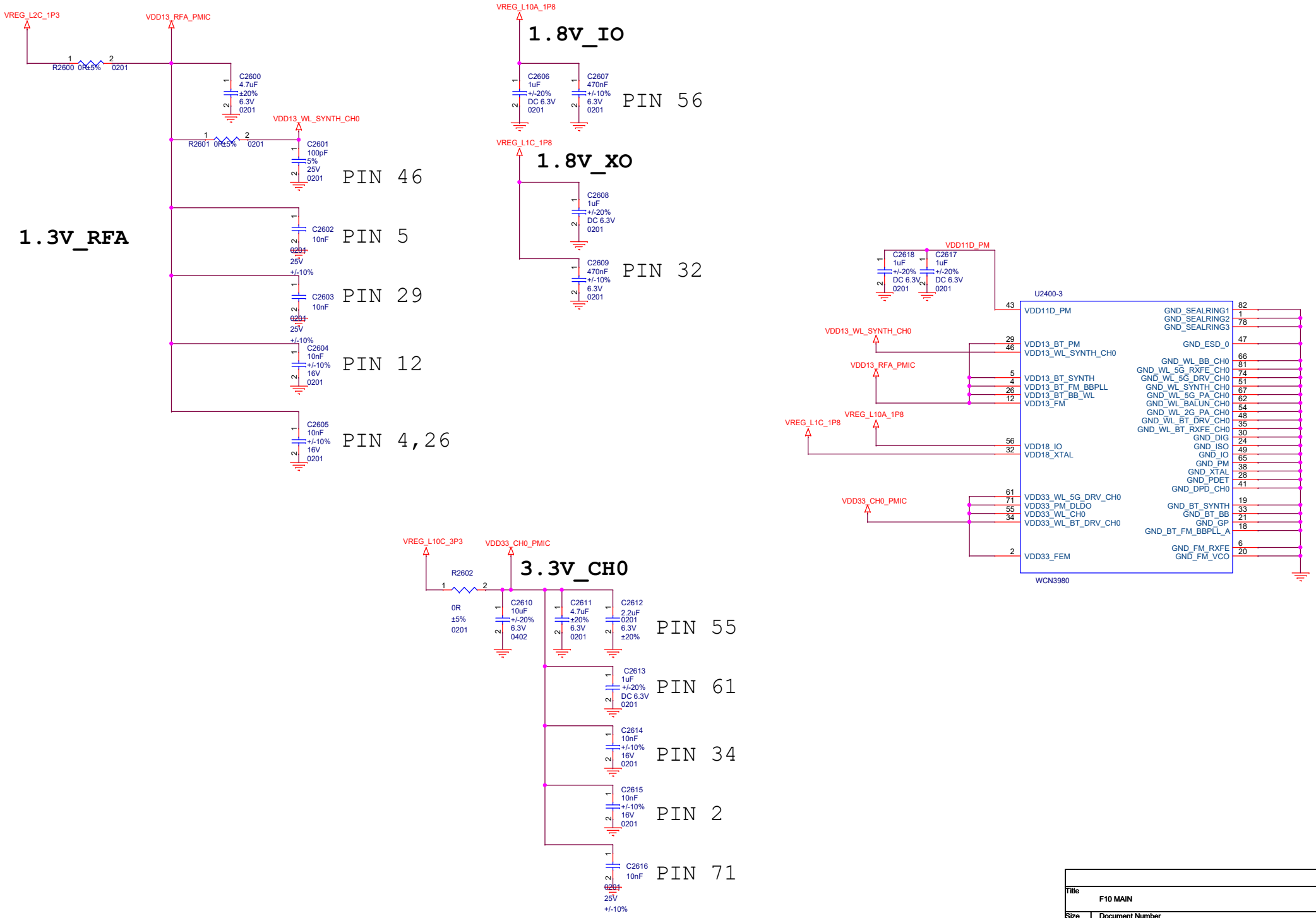

Title	F10 MAIN
Size A3	Document Number WIFI Decouping
Date: Wednesday, September 11, 2019	Sheet 27 of 71

Title	F10 MAIN
Size A3	Document Number Reserved(for 11ad/11ax)
Date: Wednesday, September 11, 2019	Sheet 28 of 71

Title	F10 MAIN
Size A3	Document Number Reserved(for 11ad/11ax)
Date: Wednesday, September 11, 2019	Sheet 29 71

Title	F10 MAIN
Size A3	Document Number Reserved(for Digital FM)
	P0
Date: Wednesday, September 11, 2019	Sheet 30 of 71

Title	F10 MAIN
Size A3	Document Number Reserved(for Analog FM)
Date: Wednesday, September 11, 2019	Sheet 31 of 71

MODE	Operation
00	NATIVE
01	TIC
10	ATEST
11	TEST

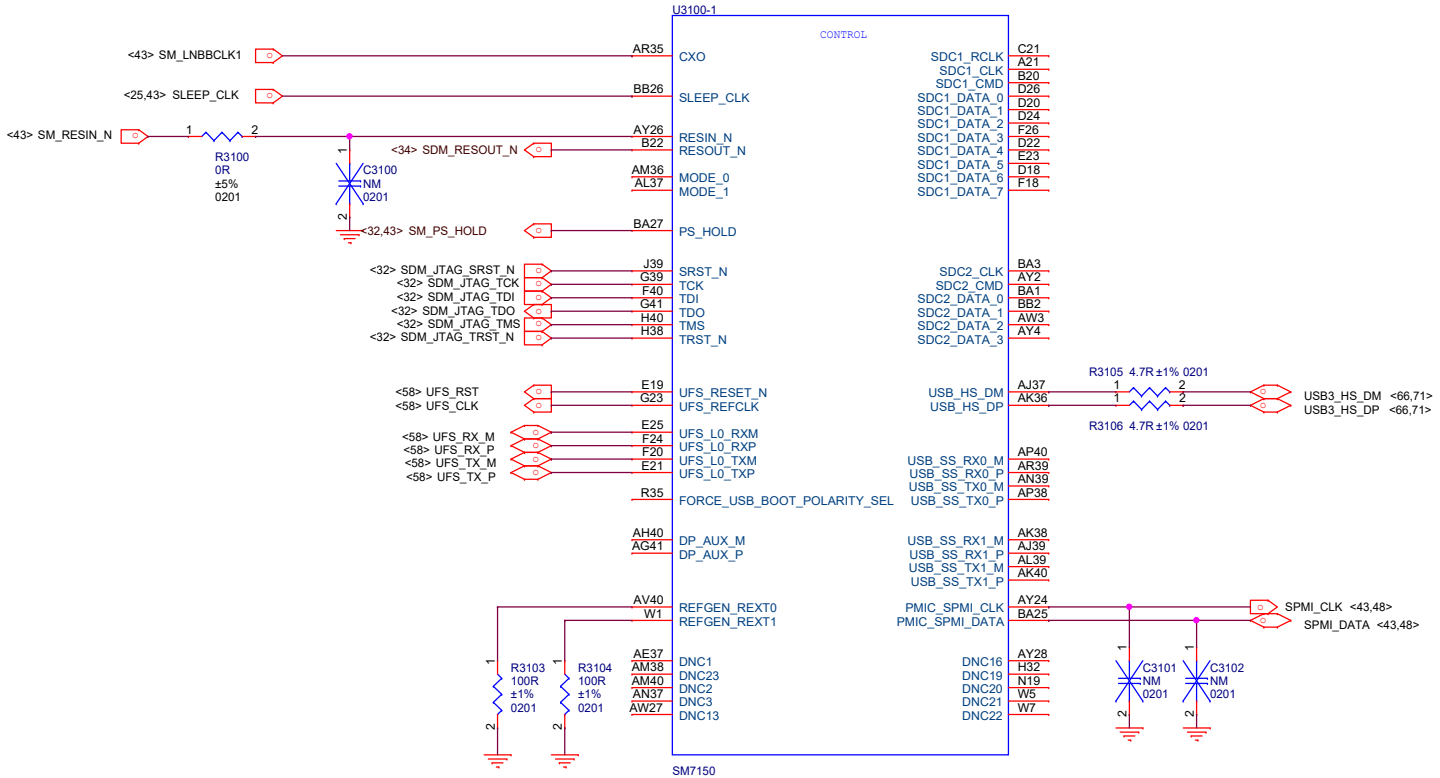

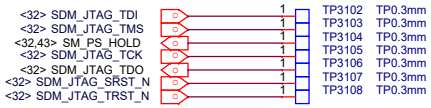

Title	F10 MAIN
Size A3	Document Number SDM855 Control
Date: Wednesday, September 11, 2019	Sheet 32 of 71

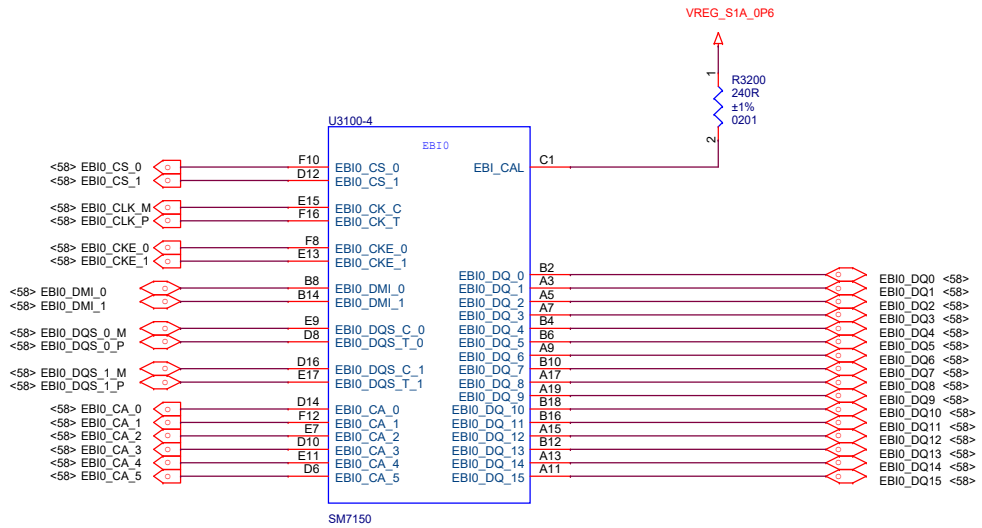

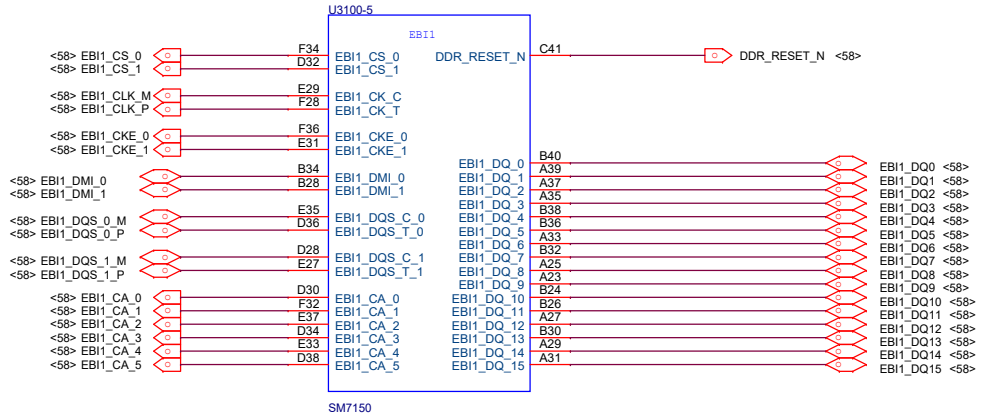

Title	F10 MAIN	
Size A3	Document Number SDM855 GPIO-1	
Date: Wednesday, September 11, 2019	Sheet 33 of 71	

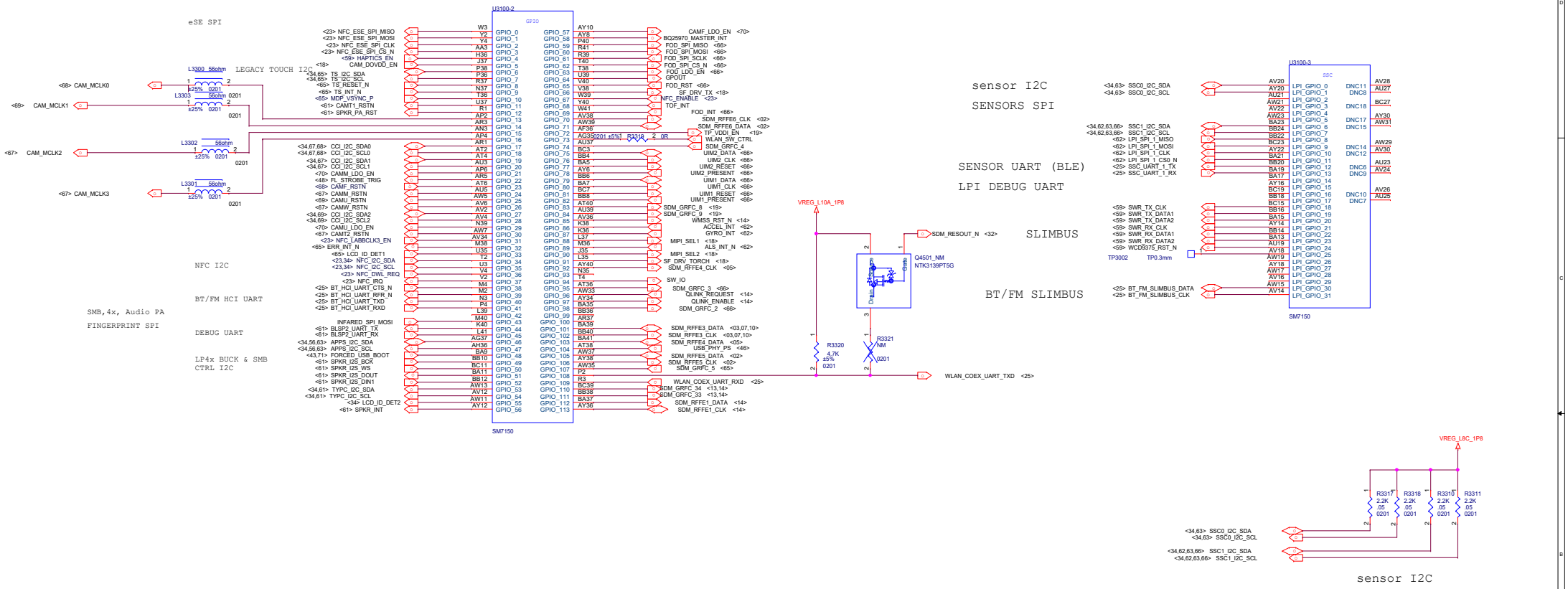

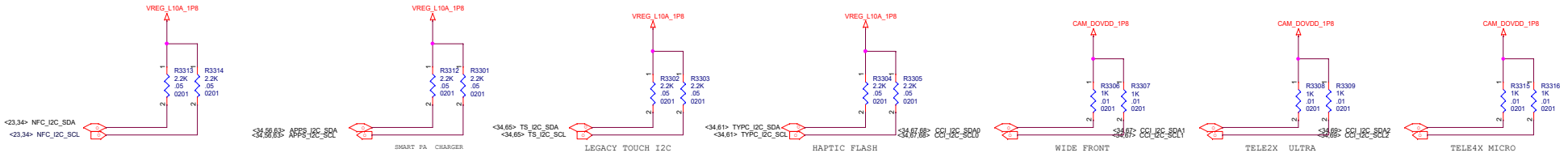

Title	F10 MAIN
Size A2	Document Number SDM855 GPIO-2
Date: Wednesday, September 11, 2019	Sheet 34 71

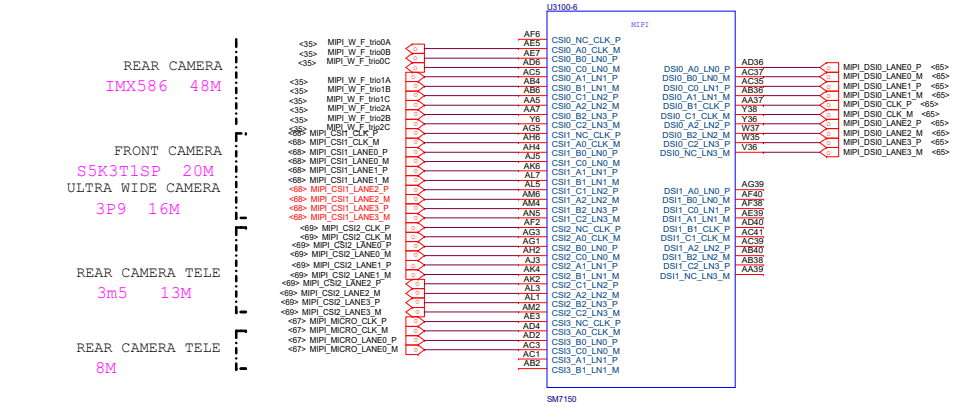

FRONT- Ultra SWITCH

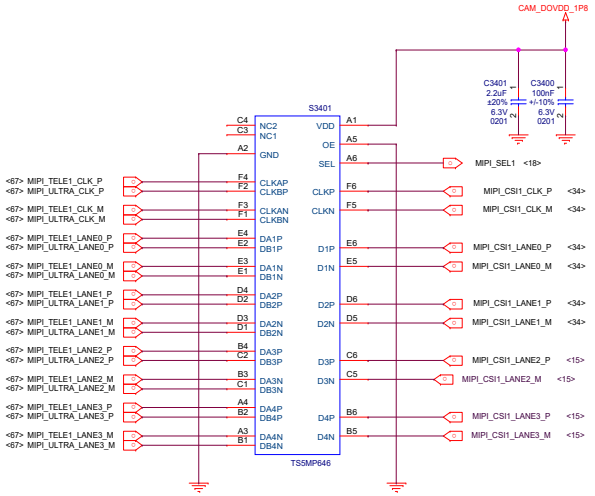

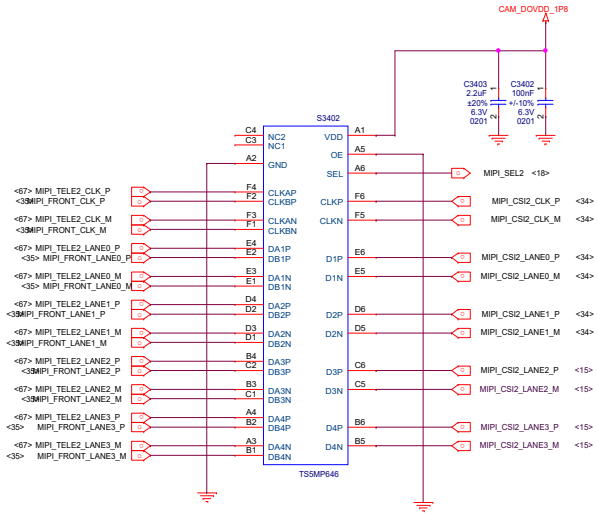

Title	F10 MAIN
Size A2	Document Number SDM855 MIPI
Date: Wednesday, September 11, 2019	Sheet 35 71

Title	F10 MAIN
Size A3	Document Number Reserved(for MIPI)
Date: Wednesday, September 11, 2019	Sheet 36 of 71

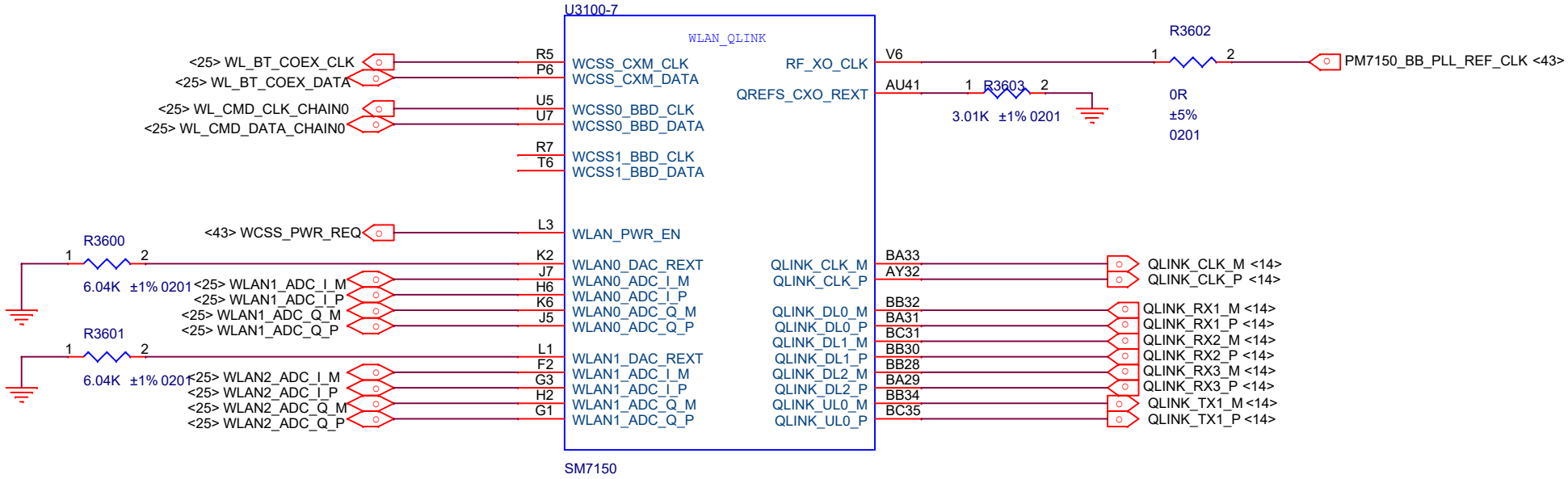

Title	F10 MAIN	
Size A4	Document Number SDM855 RF INTF	
Date: Wednesday, September 11, 2019	Sheet 37 of 71	

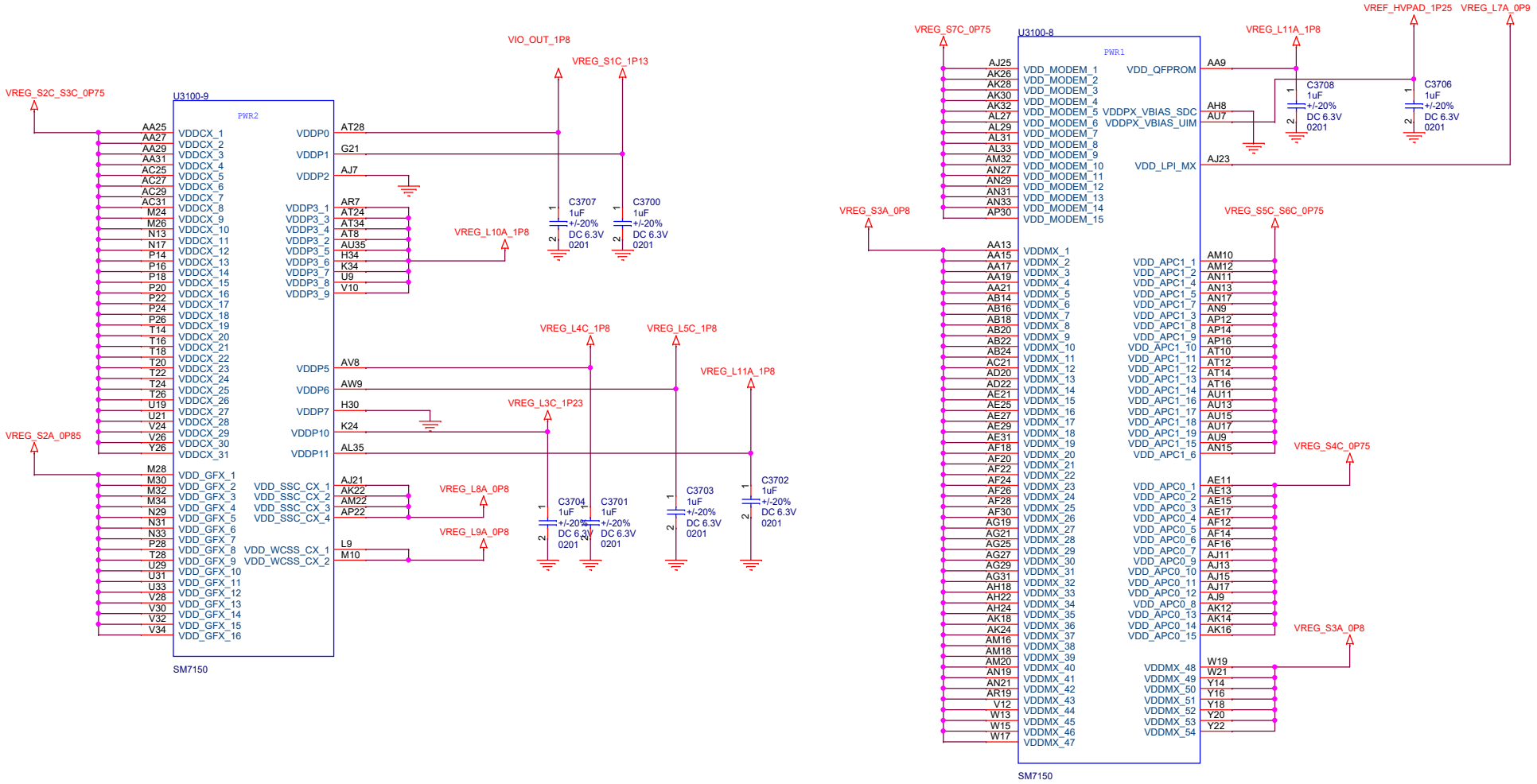

Title	F10 MAIN
Size A3	Document Number SDM855 PWR1
Date: Wednesday, September 11, 2019	Sheet 38 71

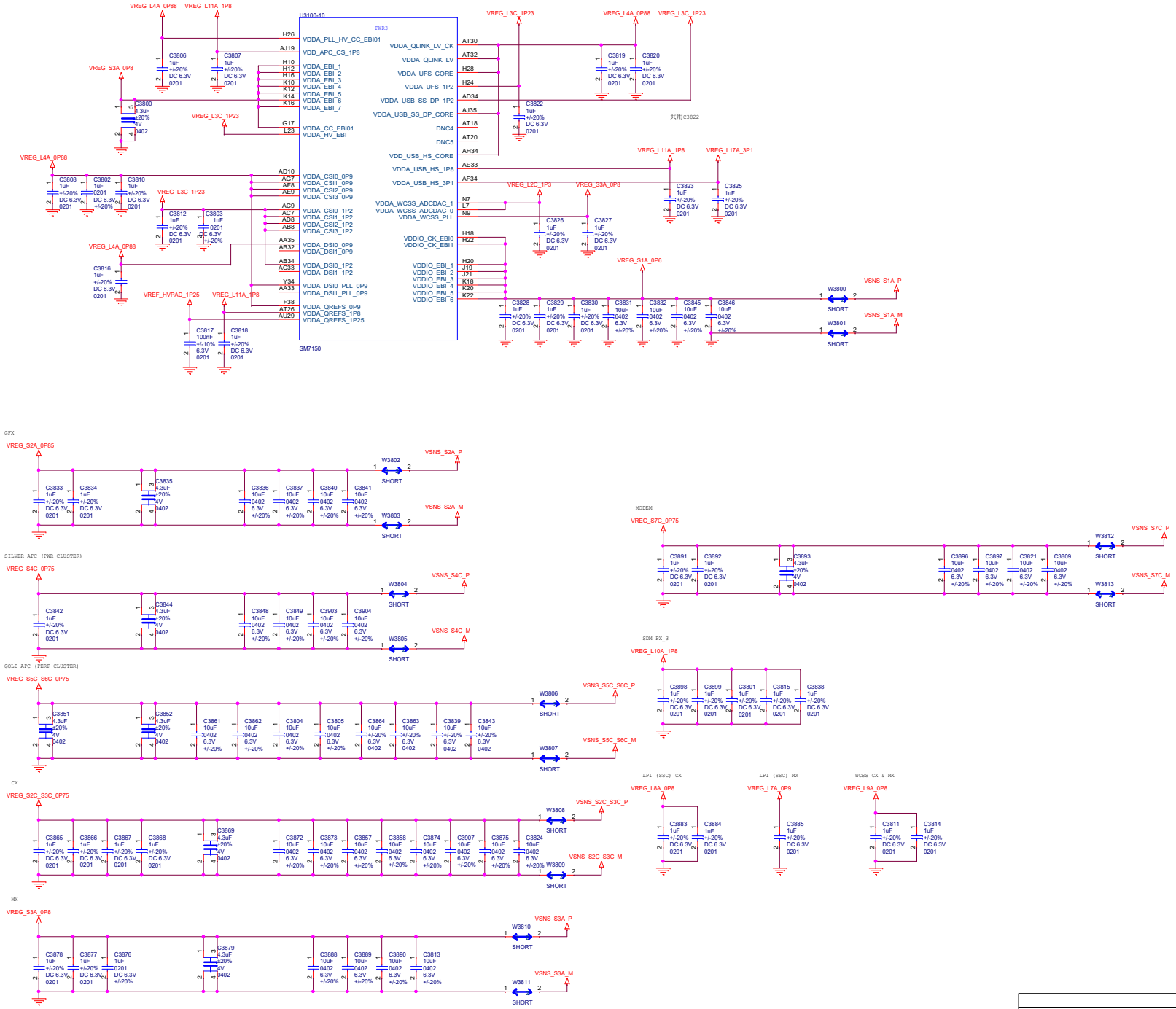

Title	F10 MAIN
Size A2	Document Number SDM855 PWR2
Date: Wednesday, September 11, 2019	Sheet 39 of 71

Title	F10 MAIN
Size A3	Document Number SDM855 PWR3
Date: Wednesday, September 11, 2019	Sheet 40 71

Title	F10 MAIN
Size A4	Document Number SDM855 PWR4
Date: Wednesday, September 11, 2019	Sheet 41 71

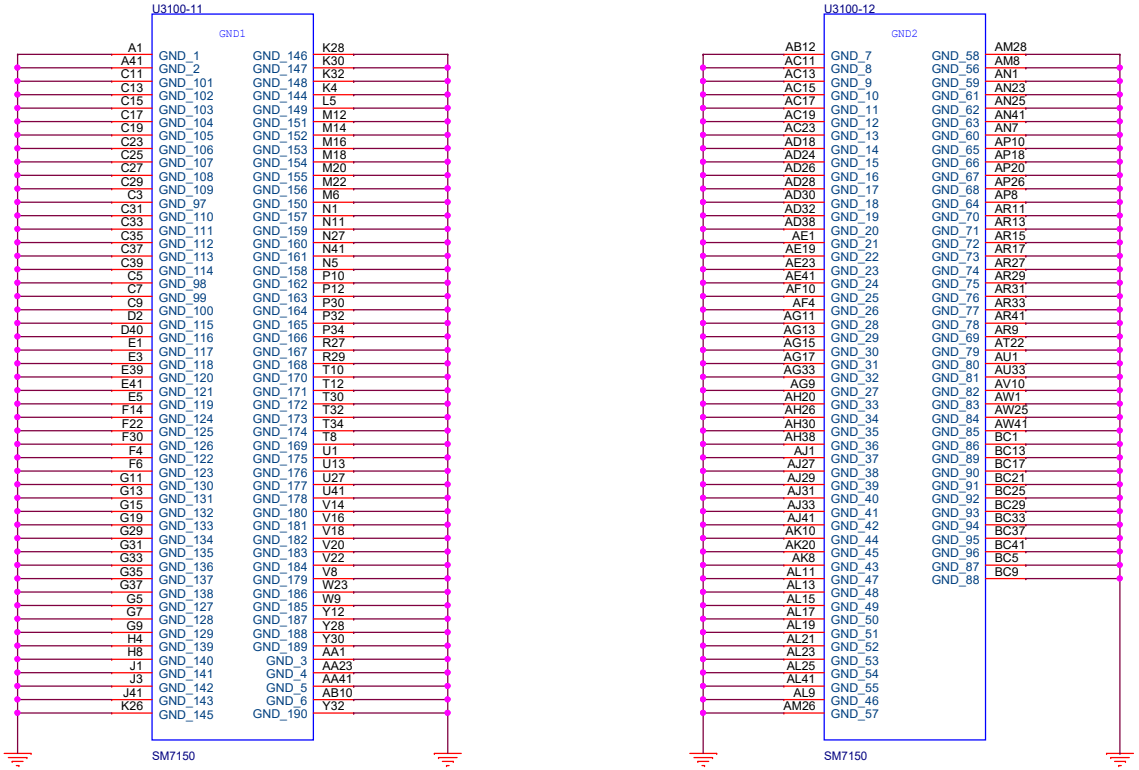

Title	F10 MAIN		
Size A3	Document Number SDM855 GND		
Date: Wednesday, September 11, 2019	Sheet 42	71	

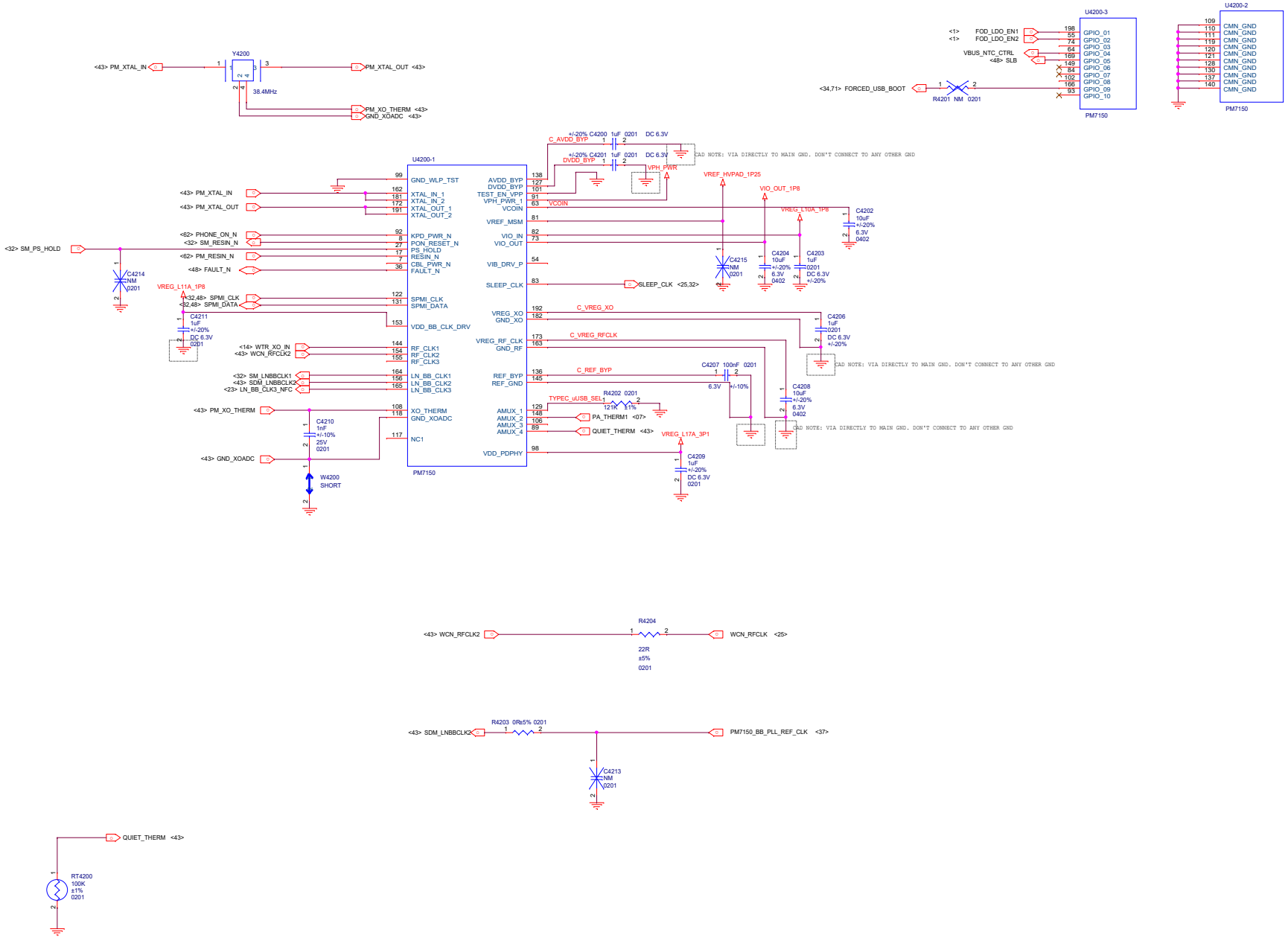

Title	F10 MAIN
Size A2	Document Number PM8655 XO&CTRL
Date: Wednesday, September 11, 2019	Sheet

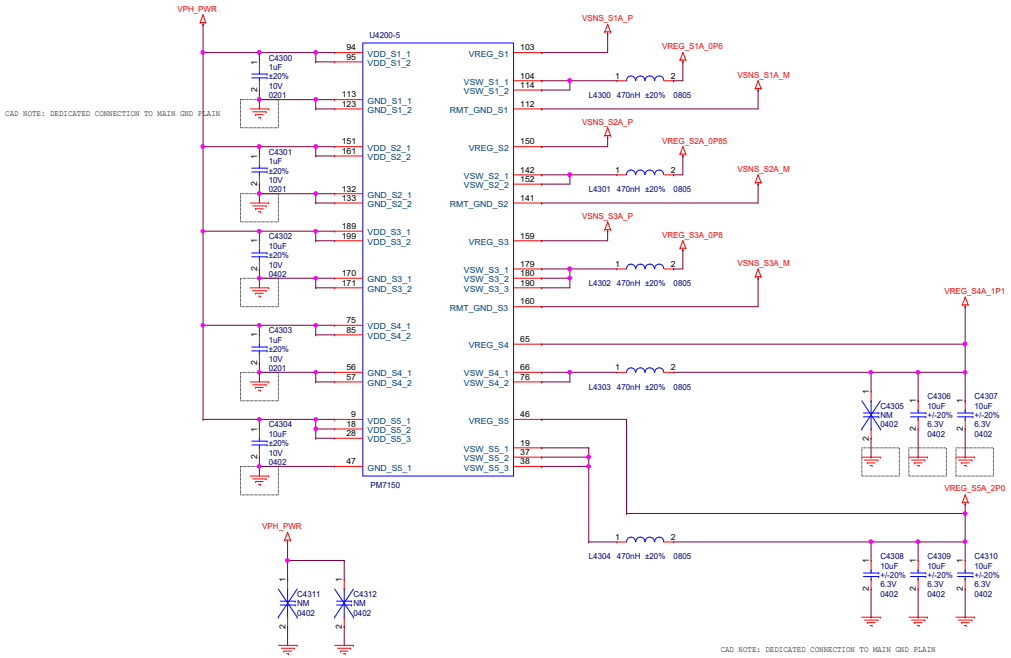

Title	F10 MAIN
Size A2	Document Number PM8655 BUCK CONVERTER1
Date: Wednesday, September 11, 2019	Sheet

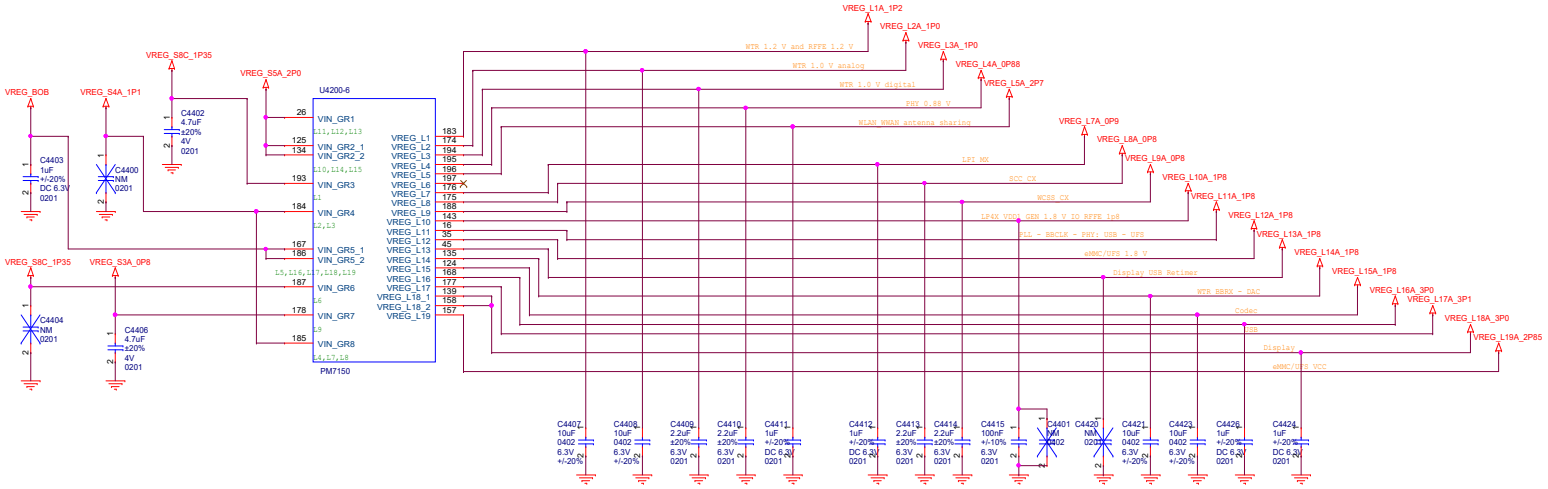

VREG_L11A_1P8预留电容删除

高度限制，10uf拆成2个4.7uf

PSEUDO CAPLESS LDOs
For CAPLESS LDOs: If decaps on the load side do not
add up to LDO spec, then install the cap close to the PMIC

Title	F10 MAIN
Size A2	Document Number PM855 BUCK CONVERTER2
Date: Wednesday, September 11, 2019	Sheet

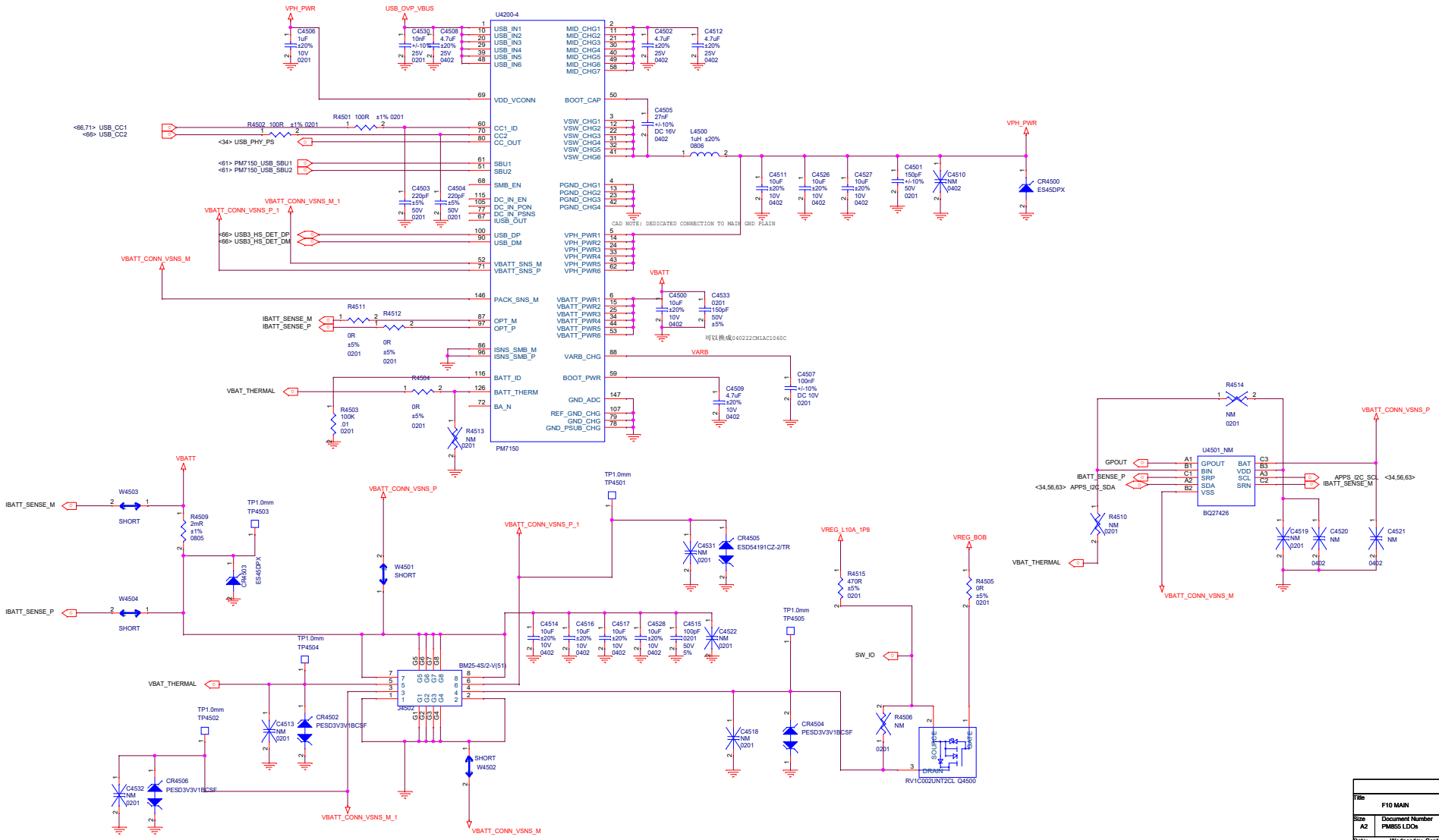

Title	F10 MAIN
Size A2	Document Number PM8655 LDOs
Date: Wednesday, September 11, 2019	Sheet

Title	F10 MAIN
Size A4	Document Number PM855 GPIO&GND
Date: Wednesday, September 11, 2019	Sheet 47 of 71

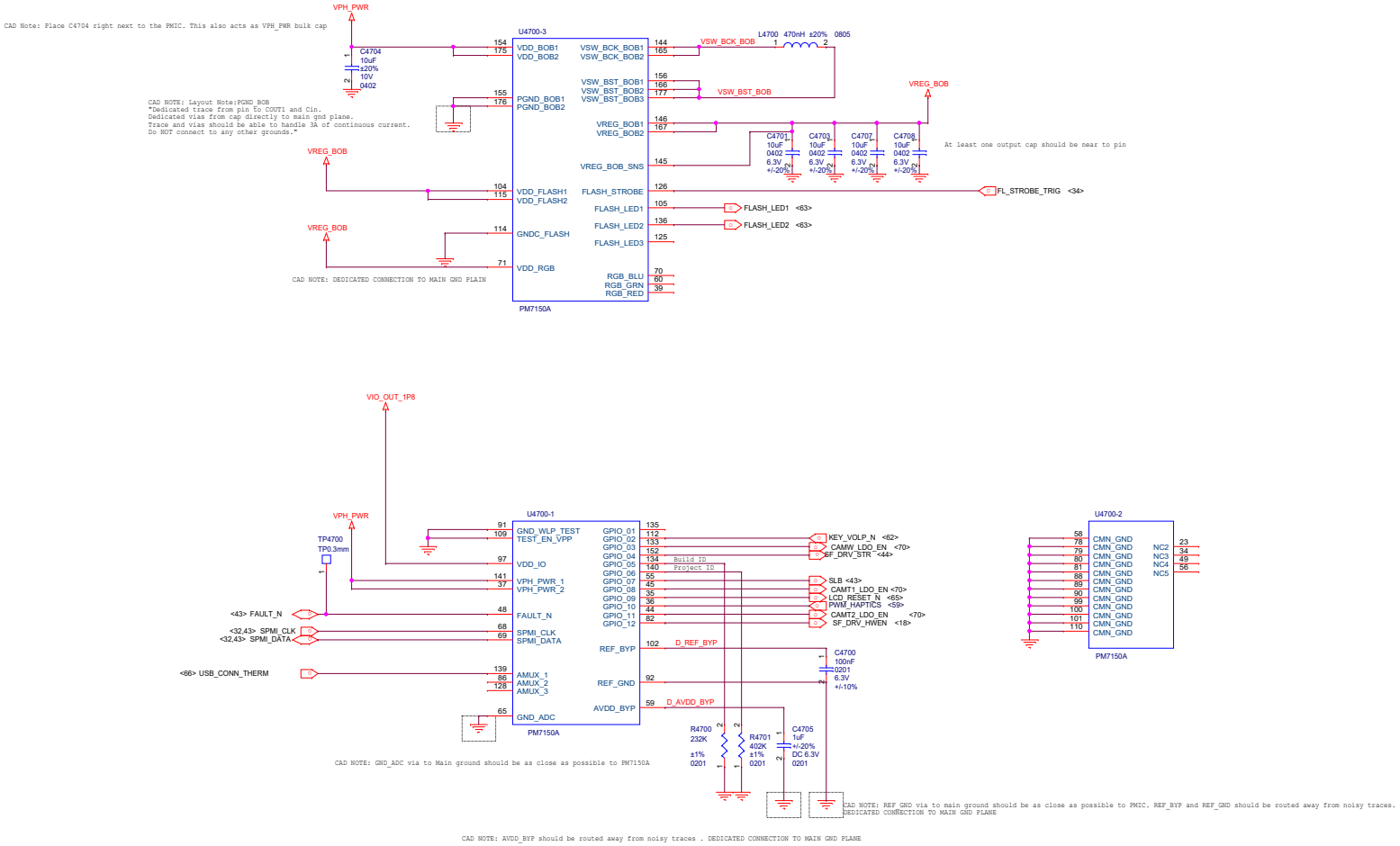

Title	F10 MAIN
Size A2	Document Number PM8655A CTRL&GND
Date: Wednesday, September 11, 2019	Sheet 48 71

Title	F10 MAIN
Size A3	Document Number PM855A BUCK CONVERTER1
	P0
Date: Wednesday, September 11, 2019	Sheet 49 of 71

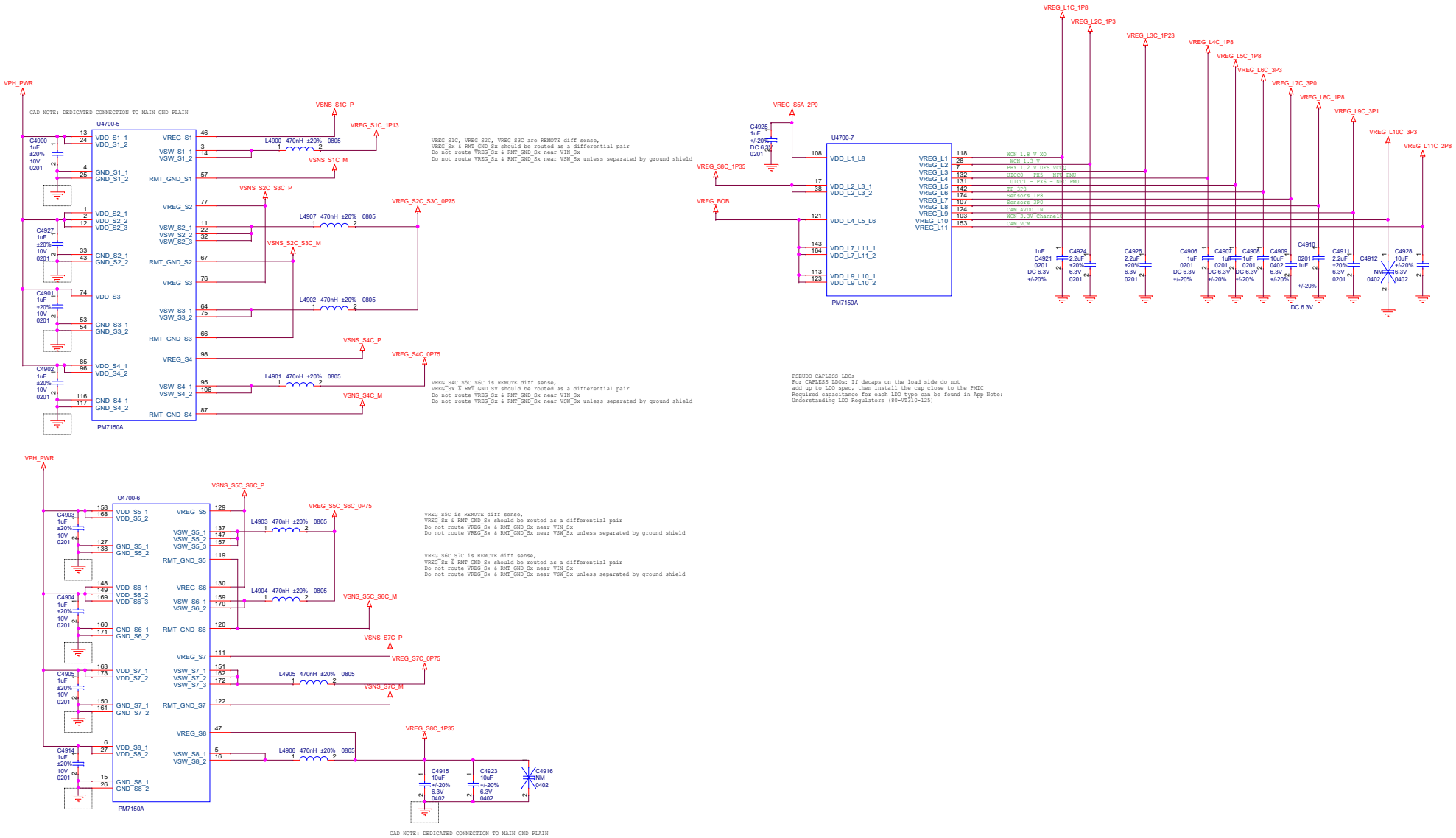

Title	F10 MAIN
Size A2	Document Number PM855A BUCK CONVERTER2
Date: Wednesday, September 11, 2019	Sheet

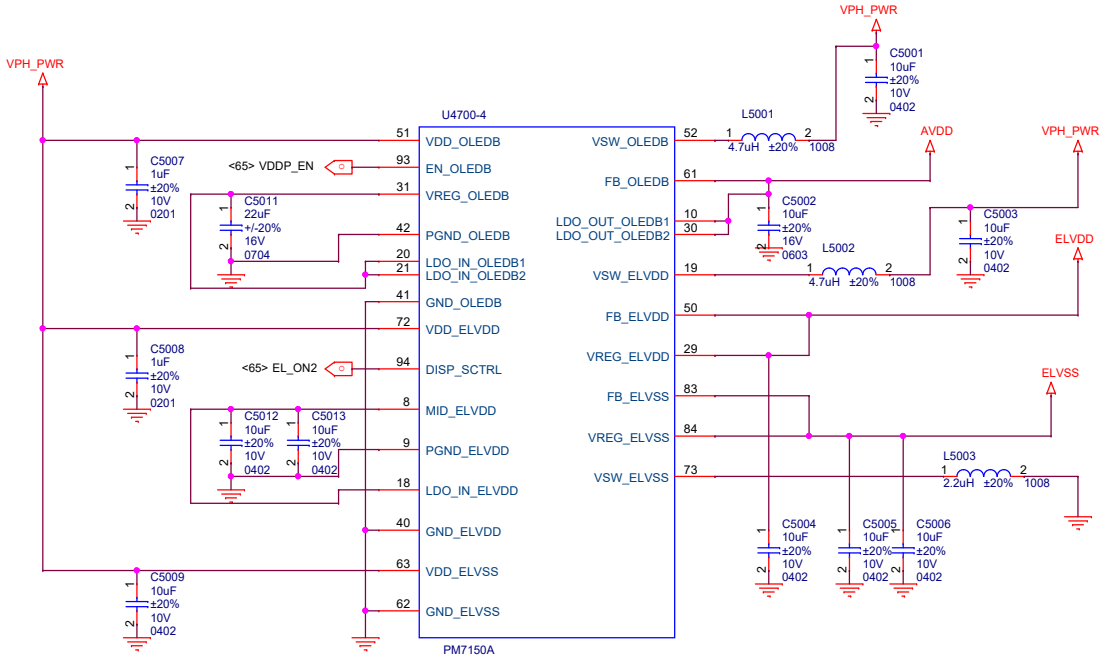

Title	F10 MAIN
Size A3	Document Number PM855A AMOLED&BOB&FLASH
Date: Wednesday, September 11, 2019	Sheet 51 71

Title	F10 MAIN
Size A4	Document Number PM855A LDOs
Date: Wednesday, September 11, 2019	Sheet 52 71

Title	F10 MAIN
Size A4	Document Number PM855B CTRL&GND
Date: Wednesday, September 11, 2019	Sheet 53 71

Title	F10 MAIN
Size A4	Document Number PM855B HAPTIC
Date: Wednesday, September 11, 2019	Sheet 54 71

Title	F10 MAIN
Size A3	Document Number PM855B Charger
Date: Wednesday, September 11, 2019	Sheet 55 71

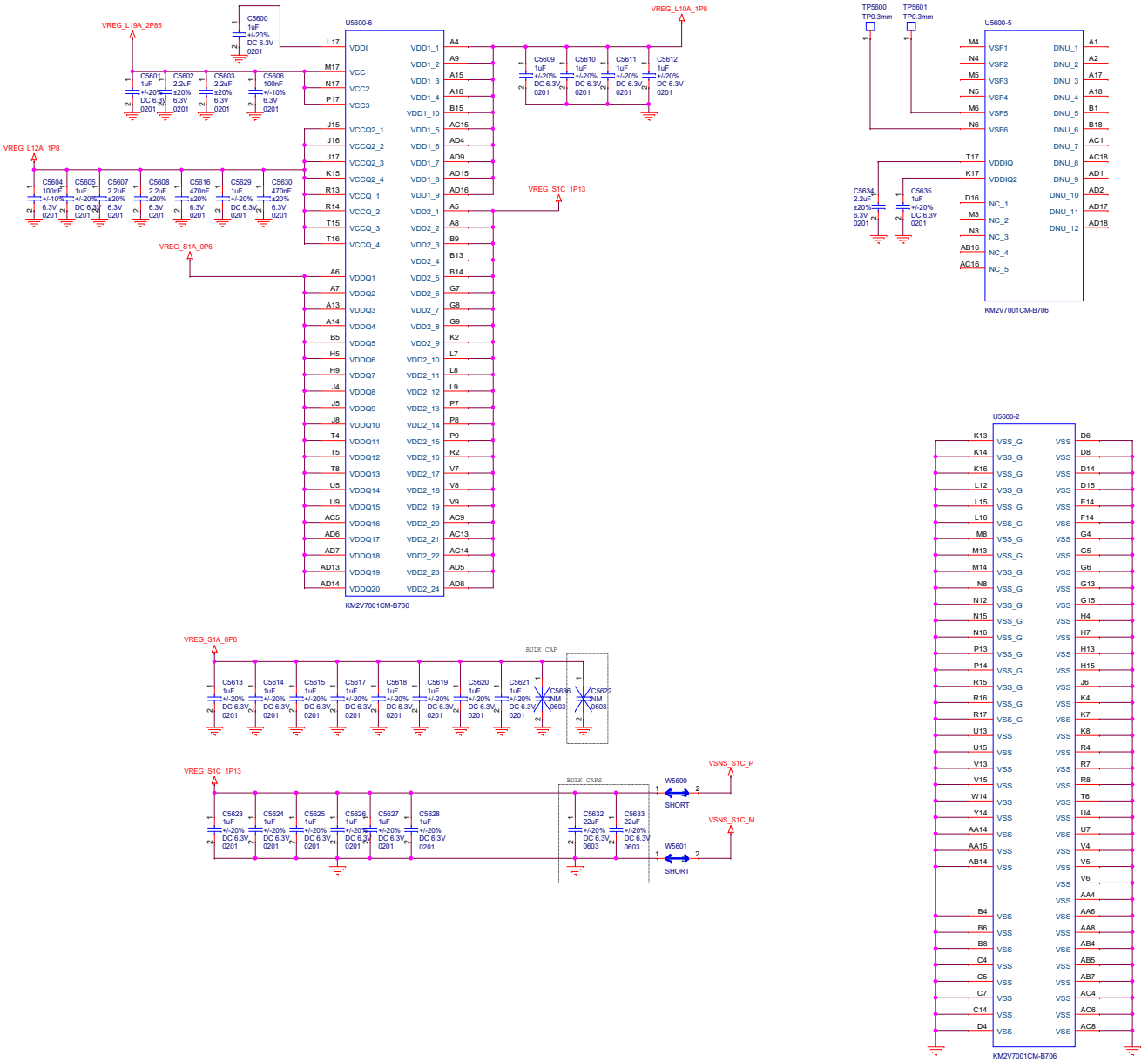

Title	F10 MAIN
Size A2	Document Number MEMORY
Date: Wednesday, September 11, 2019	Sheet

eMMC

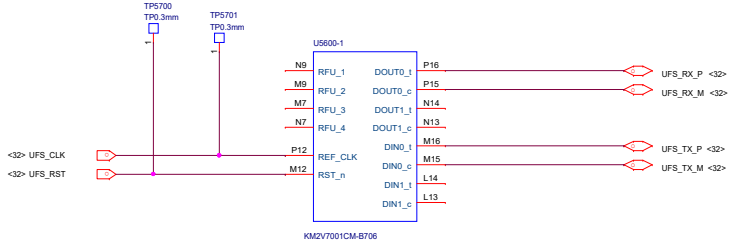

LPDDR4/4x

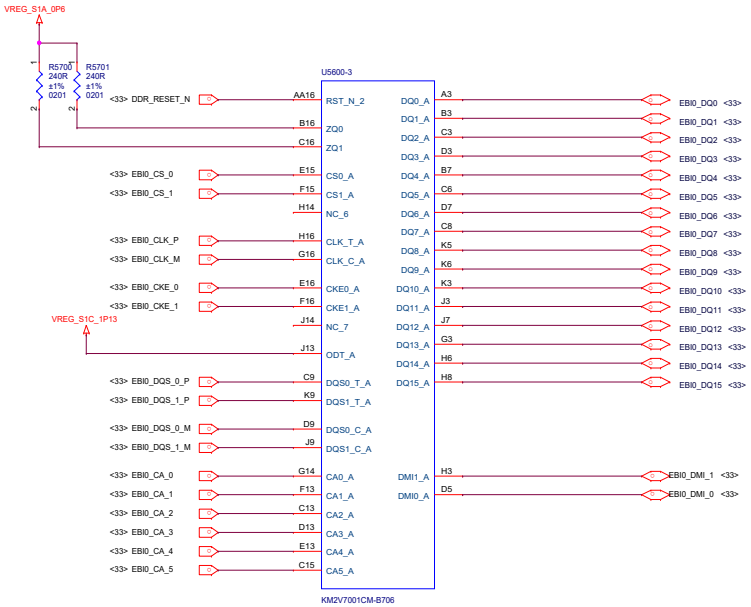

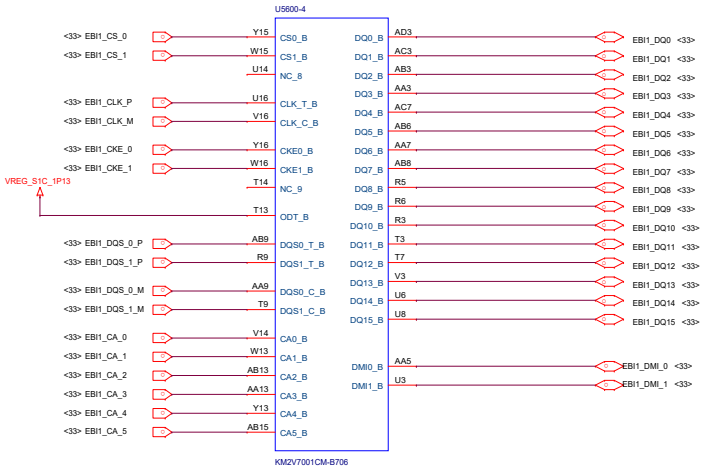

Title	F10 MAIN
Size A2	Document Number MEMORY-2
Date: Wednesday, September 11, 2019	Sheet 58 of 71

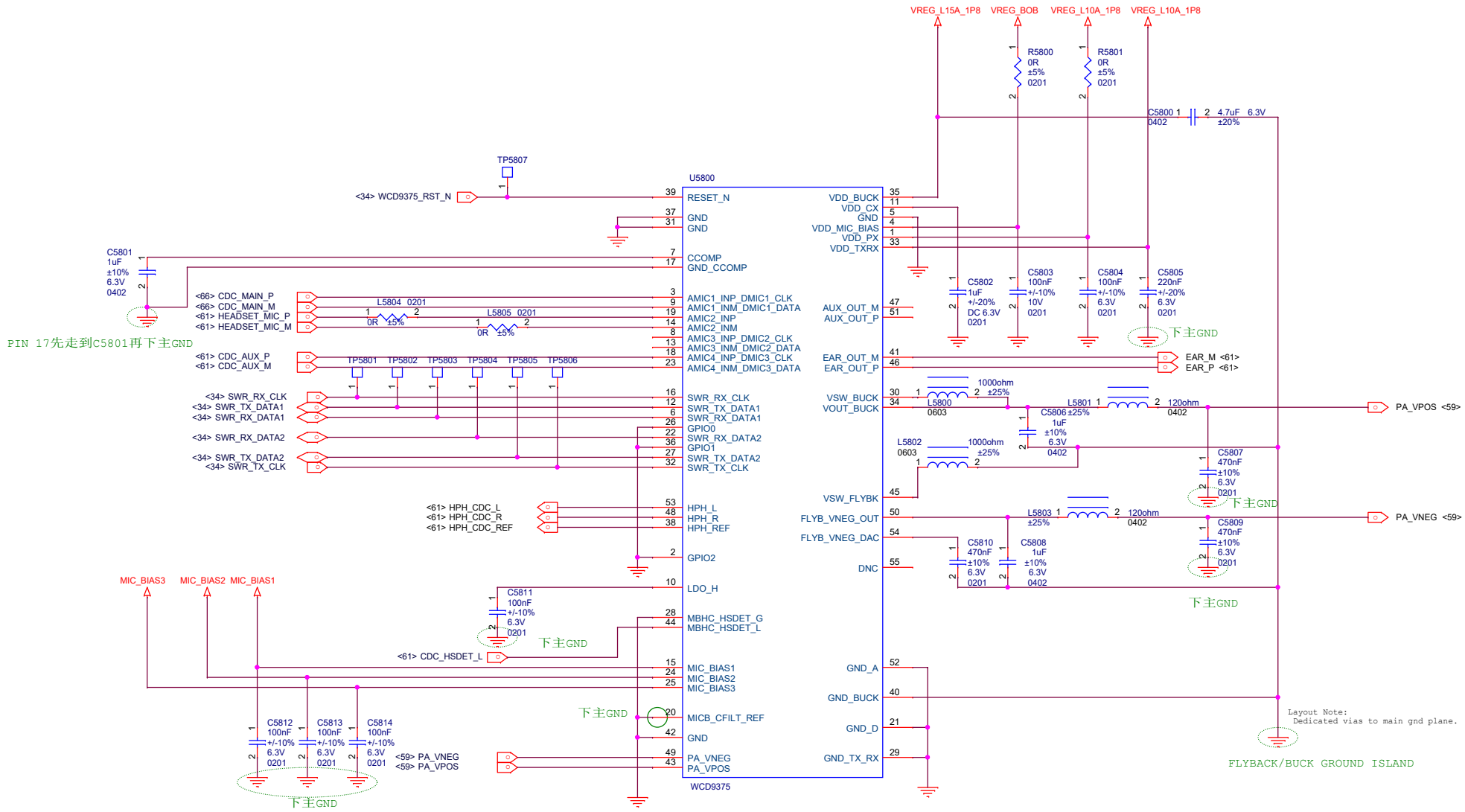

Title	F10 MAIN
Size A3	Document Number WCD9340-1
Date: Wednesday, September 11, 2019	Sheet 59 71

Title	F10 MAIN
Size A3	Document Number WCD9340-2
Date:	Wednesday, September 11, 2019
Sheet	60 of 71

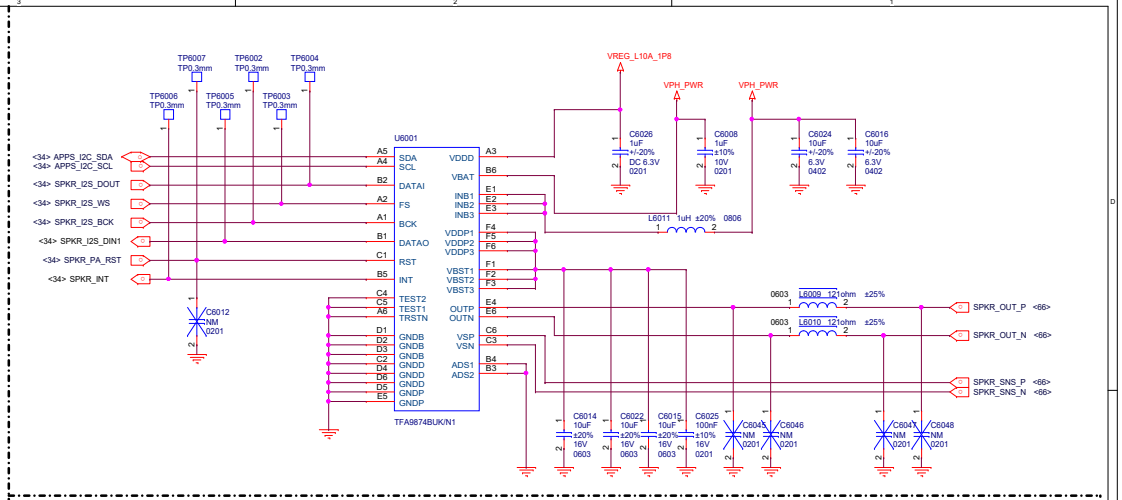

MAIN MIC

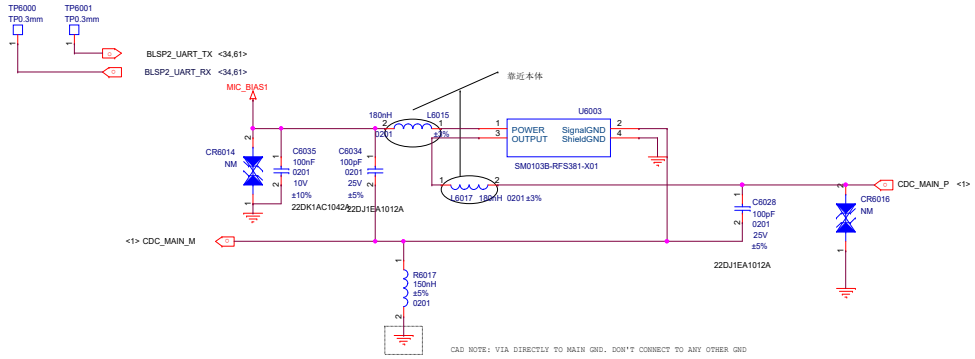

HAPTICS

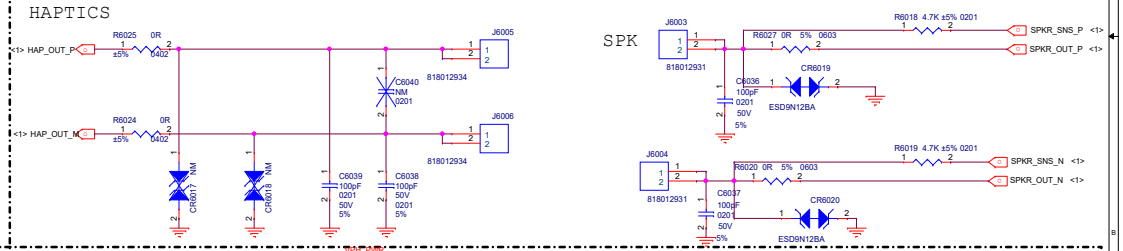

HEADSET

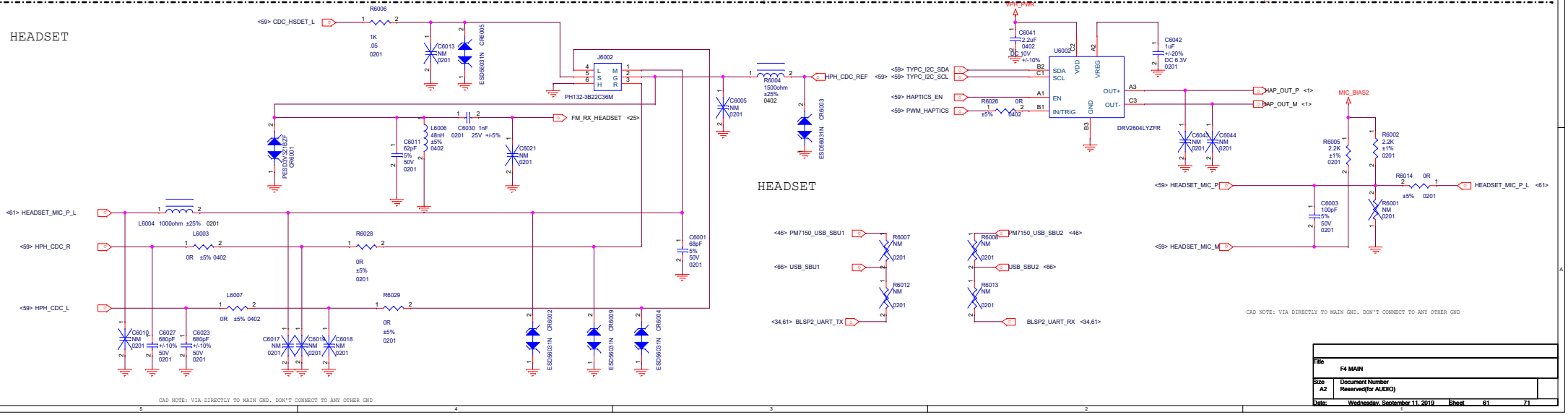

Title	F4 MAIN
Size A2	Document Number Reserved(for AUDIO)
Date: Wednesday, September 11, 2019	Sheet 61 71

L-sensor

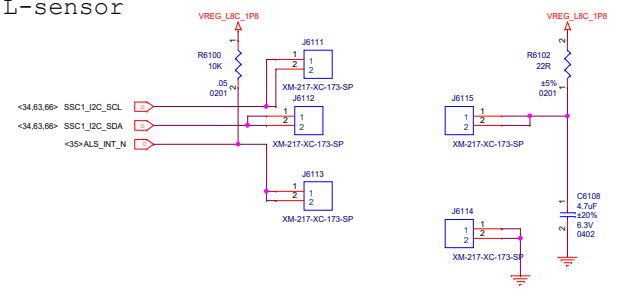

INFARED

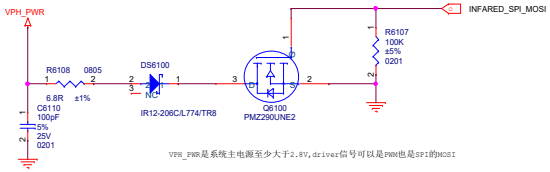

A+G

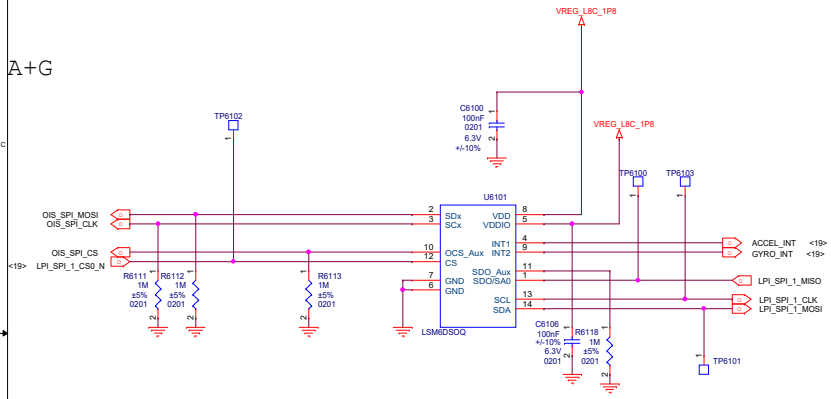

TOF

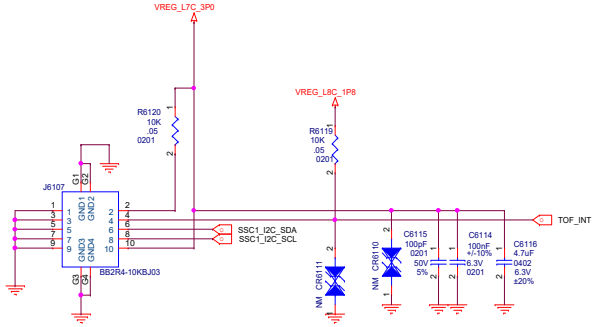

Sidekey

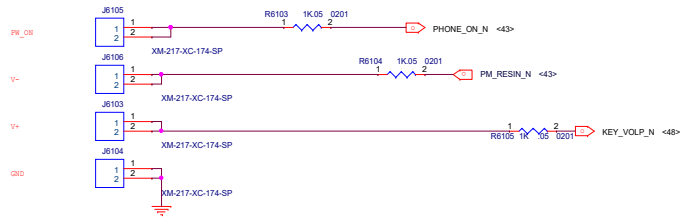

FP

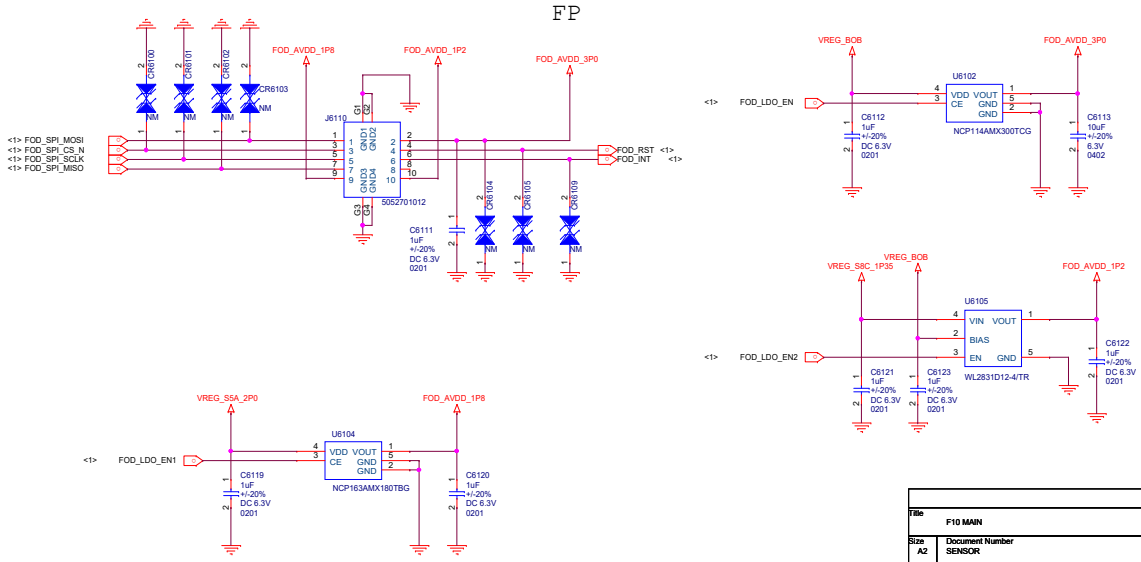

Title	F10 MAIN
Size A2	Document Number SENSOR
Date: Wednesday, September 11, 2019	Sheet 62 71

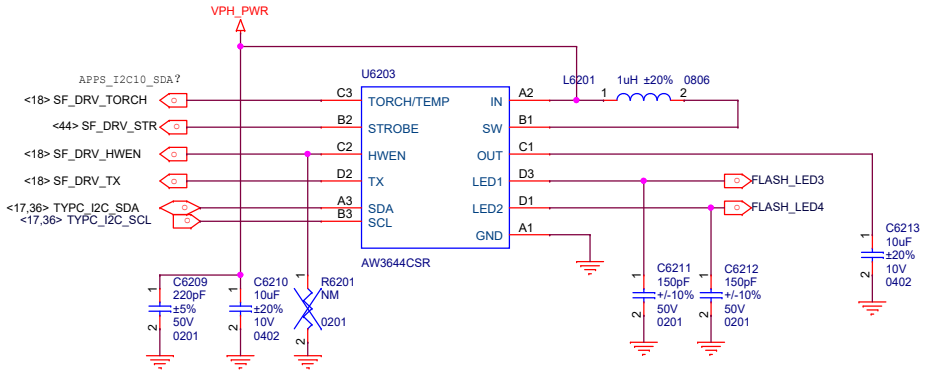

COMPASS

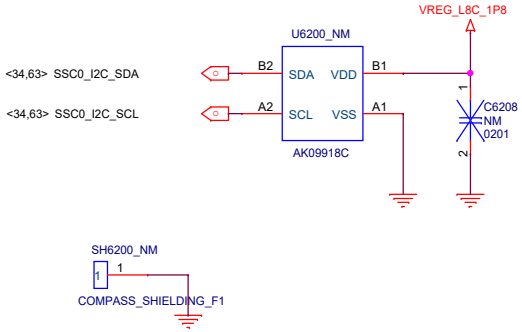

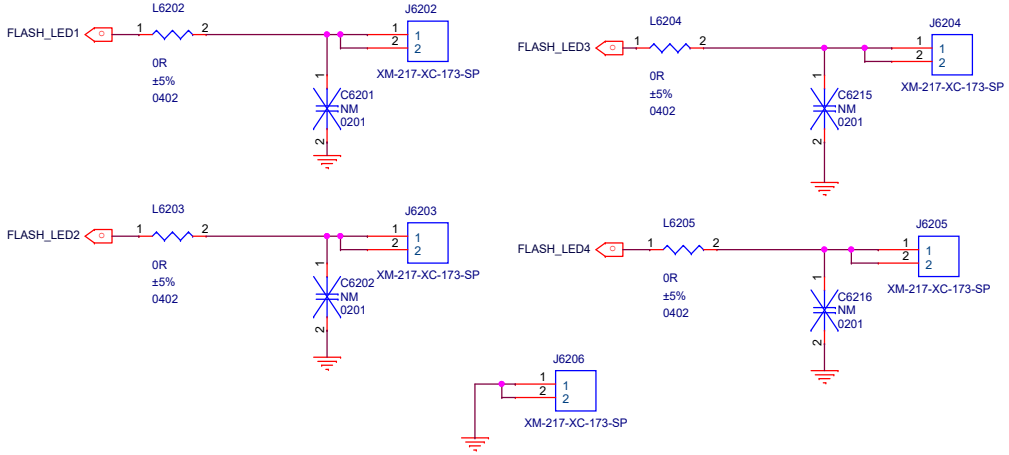

Title	F10 MAIN
Size A3	Document Number SENSOR-2
Date: Wednesday, September 11, 2019	Sheet 63 71

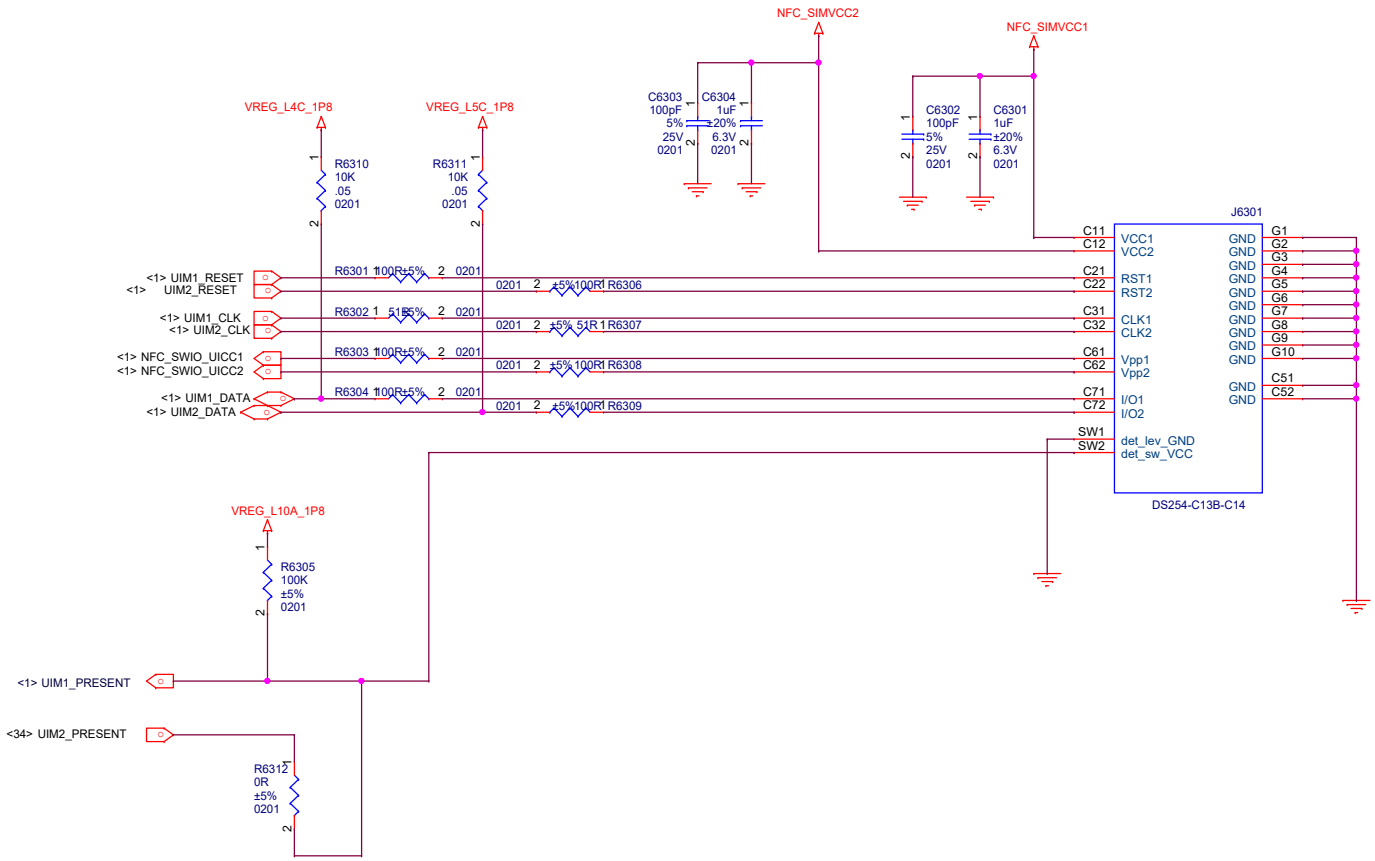

Title	F10 MAIN
Size A3	Document Number SIM
Date: Wednesday, September 11, 2019	Sheet 64 of 71

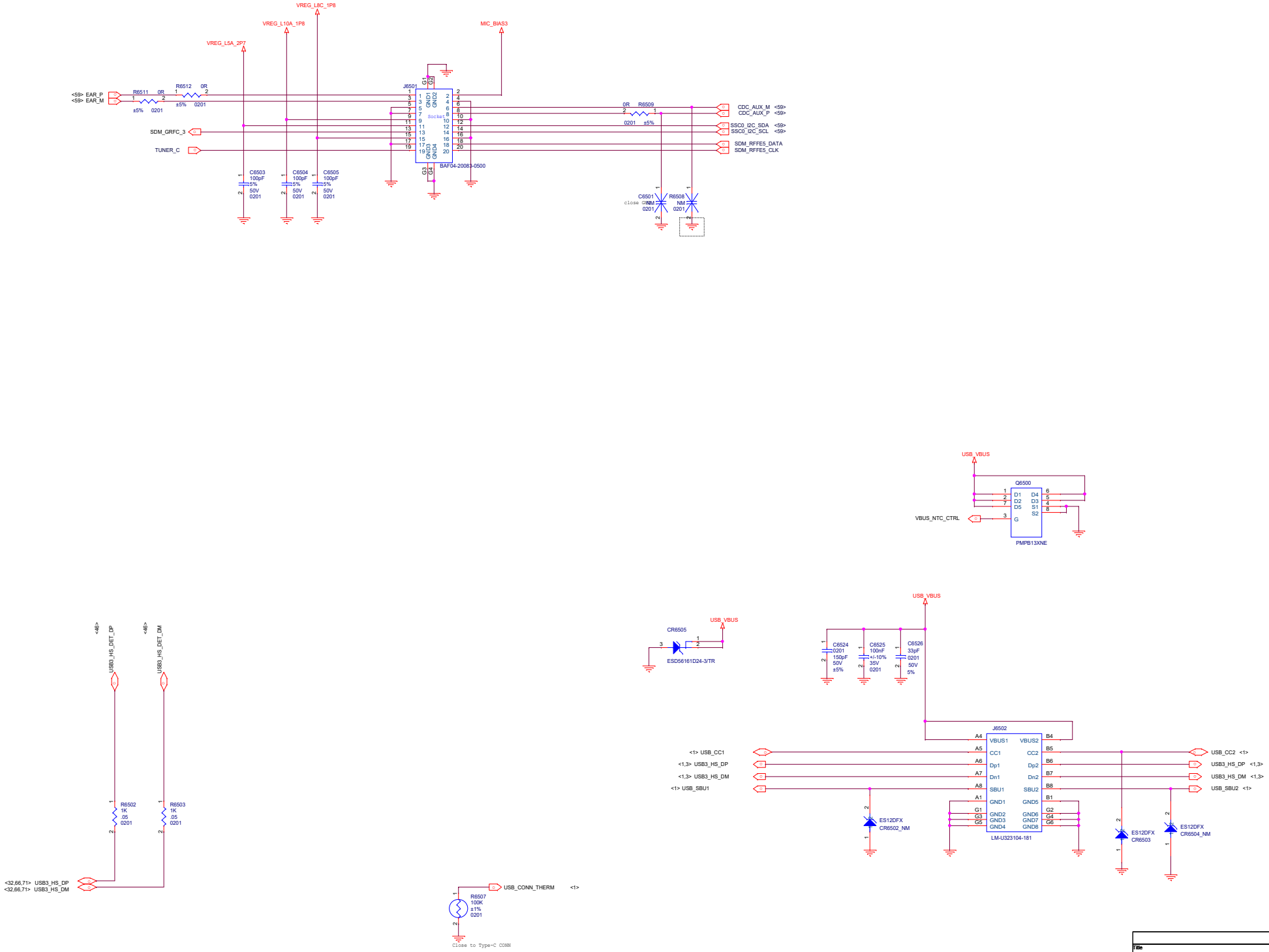

Title	F10 MAIN
Size A2	Document Number BTB
	P0
Date: Wednesday, September 11, 2019	Sheet 66 of 71

FRONT CAMERA

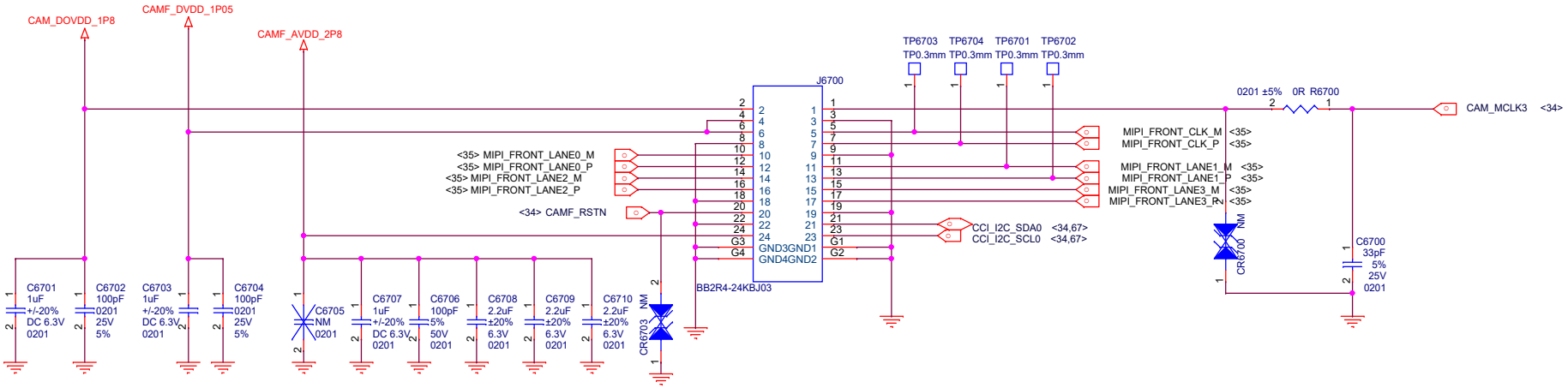

front
sensor I2C地址：0x20/0x21，EEPROM I2C地址：0xA2/0xA3

Title	F10 MAIN
Size A3	Document Number Reserved(for Analog FM)
Date: Wednesday, September 11, 2019	Sheet 68 71

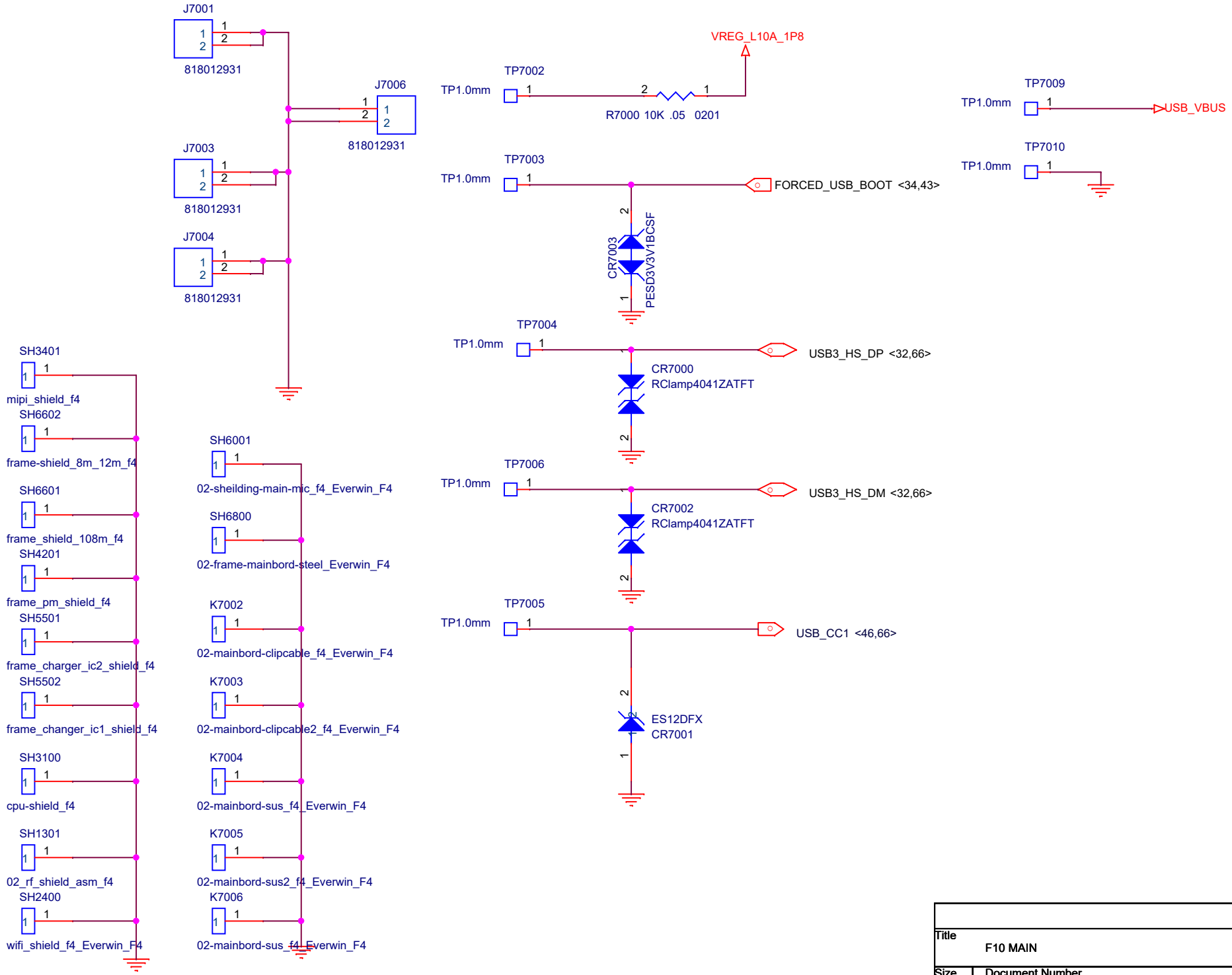

Title	F10 MAIN	
Size A4	Document Number IR LED	P0
Date: Wednesday, September 11, 2019	Sheet 71 of 71	